GUILD ◆ EDITION

Woodsmith®

Woodsmith.com

Vol. 38 / No. 227

4 Table Saw Sleds

for Safe, Accurate & Easy Cuts

Inside:

Router Table Secrets for Precision Results

Tricks to Build Projects Better & Faster

Shop Tips for Mastering Angled Cuts

New Techniques for Your Table Saw & Router

A Publication of Cruz Bay Publishing, Inc.

Woodsmith®

CREATIVE HOME GROUP
GENERAL MANAGER Donald B. Peschke
EDITORIAL MEDIA DIRECTOR Bryan Nelson
MANAGING EDITOR Vincent Ancona
SENIOR EDITORS Wyatt Myers, Phil Huber
ASSOCIATE EDITOR Robert Kemp
ASSISTANT EDITOR Erich Lage

EXECUTIVE ART DIRECTOR Todd Lambirth
SENIOR ILLUSTRATORS Harlan V. Clark, Dirk Ver Steeg, Peter J. Larson
SENIOR GRAPHIC DESIGNER Bob Zimmerman
GRAPHIC DESIGNER Becky Kralicek

CREATIVE DIRECTOR Ted Kralicek
ASSISTANT DESIGN DIRECTOR Chris Fitch
PROJECT DESIGNER/BUILDER John Doyle
CAD SPECIALIST Steve Johnson
SHOP CRAFTSMAN Dana Myers

SENIOR PHOTOGRAPHERS Crayola England, Dennis Kennedy
ASSOCIATE STYLE DIRECTOR Rebecca Cunningham
SENIOR ELECTRONIC IMAGE SPECIALIST Allan Ruhnke
PRODUCTION ASSISTANT Minniette Johnson
VIDEO EDITOR/DIRECTOR Mark Hayes

Woodsmith® (ISSN 0164-4114) is published bimonthly by Cruz Bay Publishing, Inc., 2200 Grand Ave, Des Moines, IA 50312.
Woodsmith® is a registered trademark of Cruz Bay Publishing.
Copyright© 2016 Cruz Bay Publishing, Inc. All rights reserved.
Subscriptions: Single copy: $6.95.
Canadian Subscriptions: Canada Post Agreement No. 40038201. Send change of address information to PO Box 881, Station Main, Markham, ON L3P 8M6. Canada BN 84597 5473 RT
Periodicals Postage Paid at Des Moines, IA, and at additional offices.
Postmaster: Send change of address to *Woodsmith*, Box 37106, Boone, IA 50037-0106.
Printed in U.S.A.

WoodsmithCustomerService.com

ONLINE SUBSCRIBER SERVICES

- **VIEW** your account information
- **RENEW** your subscription
- **CHECK** on a subscription payment
- **PAY** your bill
- **CHANGE** your mailing or e-mail address
- **VIEW/RENEW** your gift subscriptions
- **TELL US** if you've missed an issue

CUSTOMER SERVICE Phone: 800-333-5075 weekdays

SUBSCRIPTIONS
Customer Service
P.O. Box 842
Des Moines, IA 50304-9961
subscriptions@augusthome.com

EDITORIAL
Woodsmith Magazine
2200 Grand Avenue
Des Moines, IA 50312
woodsmith@woodsmith.com

ACTIVE INTEREST MEDIA

CHAIRMAN **Effrem Zimbalist III**
PRESIDENT & CEO **Andrew W. Clurman**
EXECUTIVE VICE PRESIDENT & CHIEF FINANCIAL OFFICER **Brian J. Sellstrom**
EXECUTIVE VICE PRESIDENT, OPERATIONS **Patricia B. Fox**

from the editor

Sawdust

Many of my favorite childhood memories center around the times I spent at my grandparents' house. After all the usual pleasantries were out of the way, all of the grandkids would head to the basement. There, we'd play with old clothes, toys, and other "ancient" items we'd find inside some old trunks my grandmother kept around. I found the trunks fascinating. You never knew what you might find as you lifted open the lid —like a treasure chest.

Well, if you'd like your kids or grandkids to be able to experience the same feeling of fascination, check out the steamer trunk that starts on page 42. Solid-wood frames surround plywood panels, ensuring the trunk will last for generations. But unlike the flat tops of many trunks, this one is domed. All the better to store even more treasures inside — while providing a unique look and some great woodworking challenges along the way.

ONE-WALL WORKSHOP. On page 24 you'll find the second installment of the one-wall workshop we began in the previous issue. To wrap things up, there are three versatile carts. The storage and assembly cart is a must-have project you'll end up using to glue up and assemble every project you build down the road. That's followed by a flip-top tool stand that works great with a planer. But it would make a perfect home for any benchtop tool. And the third cart is a router table to make sure you get the most out of your router. Best of all, these three carts store neatly under the worksurfaces of the workshop when you aren't using them.

Besides the set of versatile carts and the heirloom trunk, check out the other two projects featured in this issue. The wall calendar (page 20) is a nice project to knock out if you only have a weekend to spend in the shop. But if you have a little extra time, the craft center on page 34 provides an opportunity to try your hand at box joints and end up with a handy little storage project.

"NEW" FACE. Finally, we want to introduce an addition to the staff. Erich Lage will be providing new ideas and approaches to our projects and department articles as an assistant editor. And if the name seems familiar, it should. Erich was an illustrator on the *Woodsmith* staff in the past. Welcome back, Erich!

Bryan

contents

No. 227 October/November 2016

20

24

Projects

weekend project

Wall Calendar 20

Simple to build and easy to rearrange, this wall calendar is a quick weekend project. But you'll be using it to keep track of the days and months for years to come.

shop project

One-Wall Workshop: Versatile Carts. 24

A flip-top tool stand, a handy router table, and an assembly cart add capabililty to the one-wall workshop. Best of all, they tuck out of the way when they aren't in use.

34

42

designer project

Box-Jointed Craft Center 34

The compact, stacked trays of this craft center provide loads of storage. Then when you're ready to work, they cantilever out for quick and easy access.

heirloom project

Domed-Top Steamer Trunk 42

Frame and panel construction and brass hardware give this trunk its heirloom look. But it's the domed top that provides the woodworking challenge.

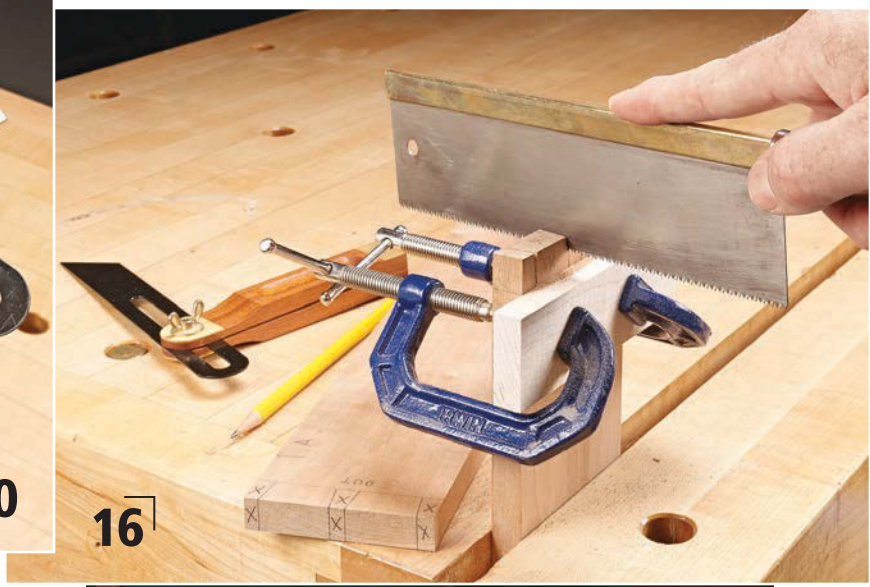

Departments

from our readers
Tips & Techniques 5

all about
Tackling Angles 10

router workshop
Precision Stopped Cuts. 12

great gear
MLCS Router Lift. 14

woodworking technique
Hand-Cut Dovetails. 16

working with tools
Get More from a Disc Sander . . . 54

in the shop
Personalizing Projects 56

woodworking essentials
The Efficient Woodworker 58

mastering the table saw
Table Saw Sleds 60

tips from our shop
Shop Notes. 64

from our readers

Tips & Techniques

Non-Stick Finishing Stands

When adding finish to a completed project, I always run into the same problem. How do I finish opposite sides without scratching or marring a finished surface. Applying stain and varnish to a project takes long enough as it is, so the last thing I want to do is chase my tail by fixing sawhorse marks or dings on a surface that's already done.

To curtail this problem, I made two stands that look like an upside-down 'T.' They sit temporarily on my sawhorses while finishing and once done, can be stowed away when not needed. Just clamp the stands to the sawhorses.

A SOFT LANDING. I used four pieces of plywood that are slightly shorter than my sawhorses. To join them, I cut a centered groove in the base piece that holds a vertical riser. I put a bullnose on the top of the riser with my router and a roundover bit. Around this riser I wrapped a piece of ¾" pipe insulation. This is the pre-sliced type that you can get at your local hardware store or home center.

Wallace Swindells
Chandler, Arizona

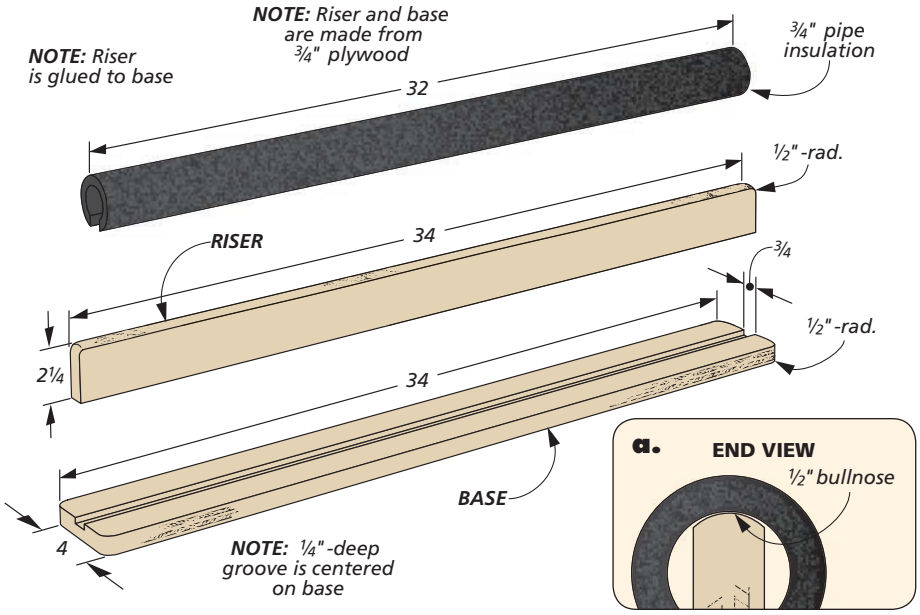

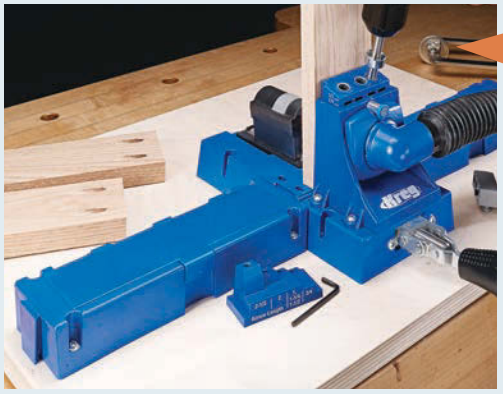

Win This Kreg K5 Jig

Send us your favorite shop tips. If your tip or technique is selected as the featured reader's tip, you'll win a *Kreg K5 Jig* just like the one shown here. To submit your tip or technique, just go online to *Woodsmith.com/magazine/* and click on the link, "SUBMIT A TIP." There you can submit your tip and upload your photos for consideration.

The Winner!

Congratulations to Robert Llewellyn, the winner of this *Kreg K5 Jig*. To find out how you can win this jig, check out the information at left.

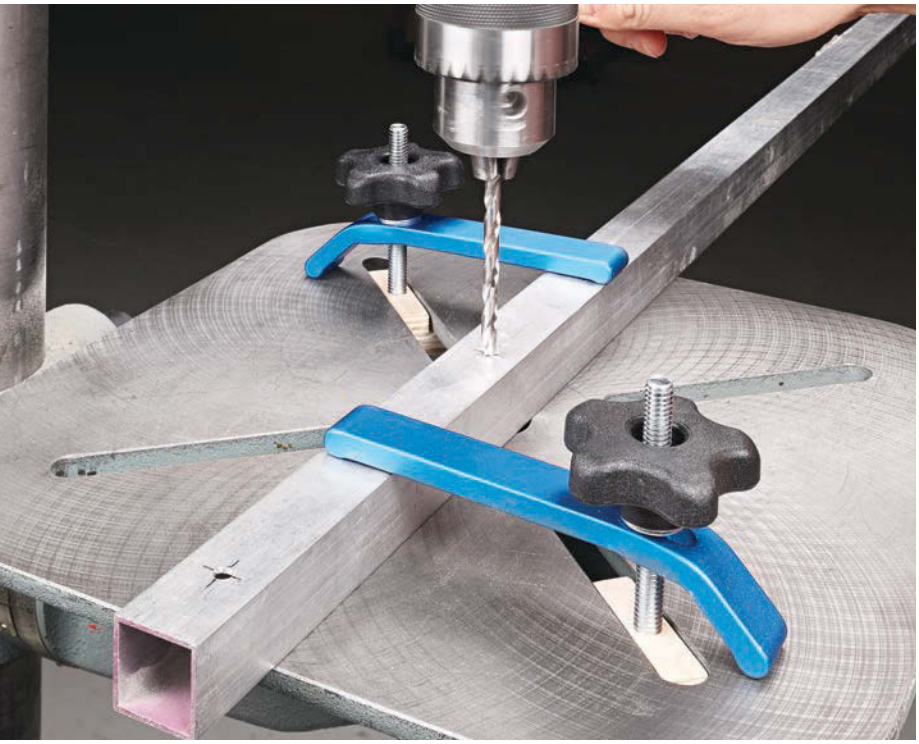

These shop-made hold-downs are custom fit to the slots of your drill press table. Two of these clamps will cover all your needs.

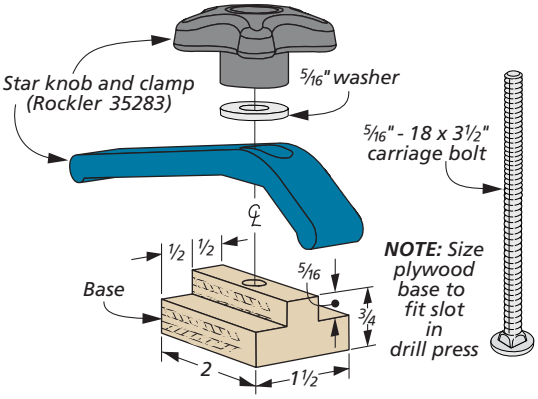

Handy Drill Press Hold-Downs

I found myself facing a project that required drilling a lot of holes in square metal tubes. Drilling metal of any kind at the drill press can be a grabby and unsettling affair. Once the bit breaks through the metal, the flutes of the drill bit often dig into it instead of shearing away the material. Then the metal bar wants to abruptly lift off the table and climb up the bit. This is not only annoying, it can also be somewhat dangerous.

GETTING A GRIP. To bring some calm to the situation, I made a couple of hold-downs that can be used in any of the four slots in the table. Each one starts with a plywood, 'T'- shaped base that fits into the opening of the slots in the drill press from underneath. A carriage bolt passes through the plywood, the hold-down clamp, a washer, and then into a star knob to bring the clamp together. This unit slides anywhere along the bed of the drill press. With the long arm and pivot ability of the hold-down clamp, you're completely covered.

Dan Martin
Galena, Ohio

QUICK TIPS

True Grit. *Rich Flynn* of *Huntington Beach, California,* finds it easy to forget what grit of paper is on his random-orbit sander when it's stored between uses. Writing the grit number on the center of the face leaves all the information needed when starting his next sanding project.

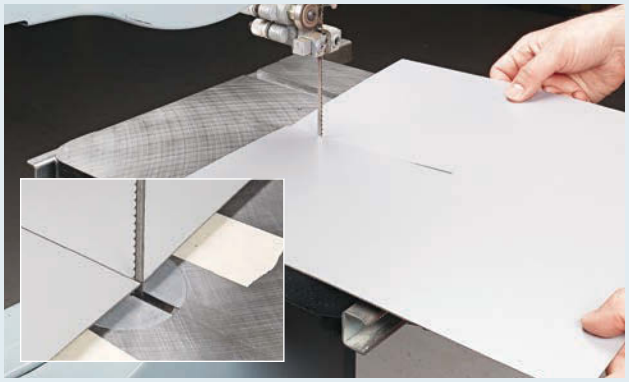

Easy Zero-Clearance Table. While cutting small pieces at the band saw, *Peter Sherrill* of *Forestville, Wisconsin,* found that cutoffs often got stuck in the throat of the insert. So he cut a kerf in a piece of plastic laminate to form a zero-clearance table. Double-sided tape holds the table in place.

▲ The notch in the rear of the shelf wraps around the shelf standards at the back where things can roll off.

▲ The hole in front is sized to match the tab on the bracket. This locks the shelf in place, and lets you install a wider shelf.

Better Shelves for Standards & Brackets

Shelving made with store-bought shelf standards and brackets have a couple of downfalls. First, the brackets don't allow for very deep shelves. And second, because of the thickness of the standards, there's a gap left at the back of the shelf that allows things to fall off.

To solve both of these problems, I made wider shelves with notches in the back to close the gap (photo, upper right). A hole in the shelf locks into the front of the bracket, as shown at right.

David Chester
Langhorne, Pennsylvania

Ruler Holder

Whenever I'm in the middle of a project, it seems I'm always fishing around for one of my rulers. So I made a home for them right on the side of my bench. This is a simple block of wood that I fashioned to fit my two most-used rulers. A deep groove cut with a thin-kerf blade cradles them. A cutout in the center lets me select whichever ruler I need. And a rare-earth magnet grabs and holds the two rulers in place when I'm not using them.

Paul Fiebich
Derby, Kansas

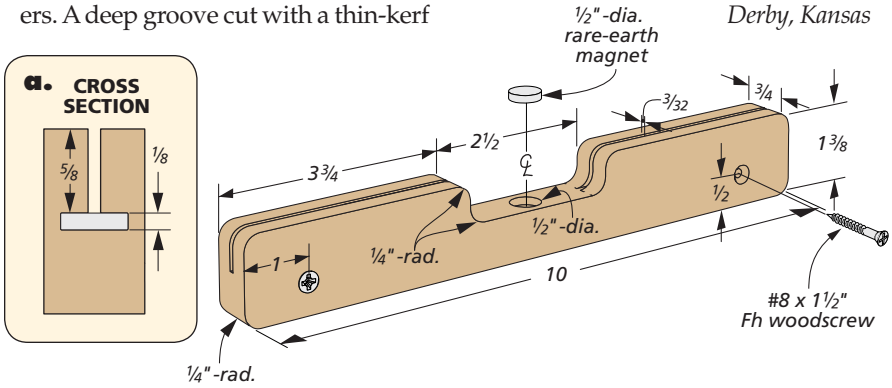

DIGITAL WOODSMITH

SUBMIT TIPS ONLINE

If you have an original shop tip, we would like to hear from you and consider publishing your tip in one or more of our publications. Jump online and go to:

Woodsmith.com
and click on the link,
"SUBMIT A TIP"

You'll be able to tell us all about your tip and upload your photos and drawings. You can also mail your tips to "Woodsmith Tips" at the editorial address shown on page 2. We will pay up to $200 if we publish your tip.

RECEIVE FREE ETIPS BY EMAIL

Now you can have the best time-saving secrets, solutions, and techniques sent directly to your email inbox. Just go to:

Woodsmith.com
and click on,
"Woodsmith Tips"

You'll receive one of our favorite tips by email each and every week.

QUICK TIPS

Quick Whiteboard. Tired of searching for notes jotted on scraps of paper, *Bob Schultz* of *Saint Charlottesville, Virginia,* turned some of his shop doors into big note pads. Vinyl peel-and-stick whiteboard decals found online can be cut to fit inside the door panel.

Small Parts Tray. Instead of pitching an old keyboard tray, *Robert Wintrow* of *Ridge Spring, South Carolina,* installed it under his workbench. This gives him an additional surface for holding tools and project hardware. He just slides it away when it's not needed.

Attaching Cauls to Clamps. *Emanuel Ringel* of *Fort Washington, Pennsylvania,* has a solid fix for a wobbly problem. By cutting V-grooves in small blocks and screwing them to his bar clamp pads, he no longer has to struggle when clamping curved shapes.

Clamp Handle Hand Grip

Getting a firm grasp on bar clamp handles can be hard at times. Dry, winter hands combined with a touch of arthritis can take the fun out of my shop time real fast, especially on a project that calls for a lot of clamps.

GET A GRIP ON IT. A good fix for this is a simple plywood wheel that slides on to the clamp handle. A slot in the wheel and a screw lets you cinch the wheel firmly in place. The size of the handle hole may vary depending on your clamp handles.

For the clamp size shown here, the handle wheel starts as a 3¼"- square piece of plywood. First, drill a hole in the center with a 1⅛" Forstner bit. Next, cut the relief slot centered on the side of the block at the band saw. Then drill the pilot and counterbored clearance hole for the screw (detail 'a'). Next, head to the band saw and cut out the outer circumference. Then, to finish up, sand the wheel smooth before installing it on the clamp handle.

Jim Moorehead
Barrigada, Guam

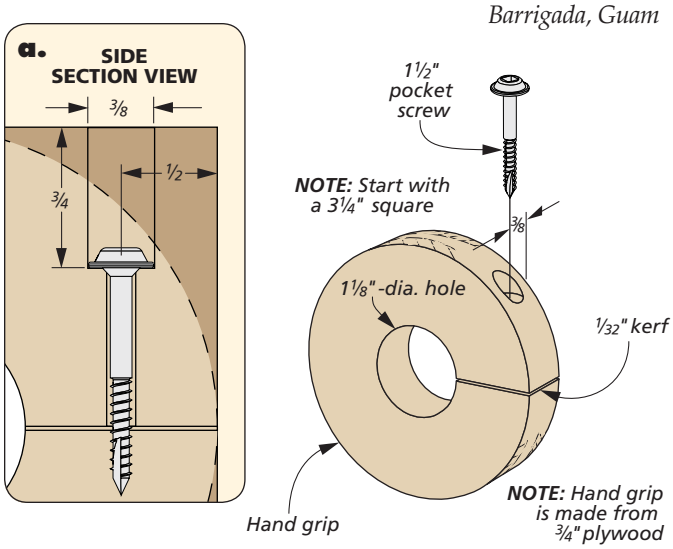

Table Saw Side Support

I love the mobility and power of my contractor's saw. I wouldn't trade it for the world. But the setup does have some shortcomings, mainly when working with long boards or plywood. There's just not enough support for my liking when making these cuts.

WING MAN. To improve on this, I built a sliding wing that attaches to the guide rails of my table saw. The whole system is made of plywood. The front arm glides in and out of the attached front tube, while the rear arm combined with a piece of aluminum angle straddles the rear rail. The two arms are tied together with the plywood wing end.

DETAILS. The aluminum angle that's attached to the rear arm has a strip of nylon tape for smooth operation (detail 'a'). The front arm has a groove in the bottom to allow clearance for the fence bolts (detail 'b'). Both arms have a threaded rod epoxied into the ends to attach them to the wing end with knobs. The plywood wing end is slotted to allow for adjustments in height as the wing extends (inset photo).

Robert Llewellyn
Memphis, Tennessee

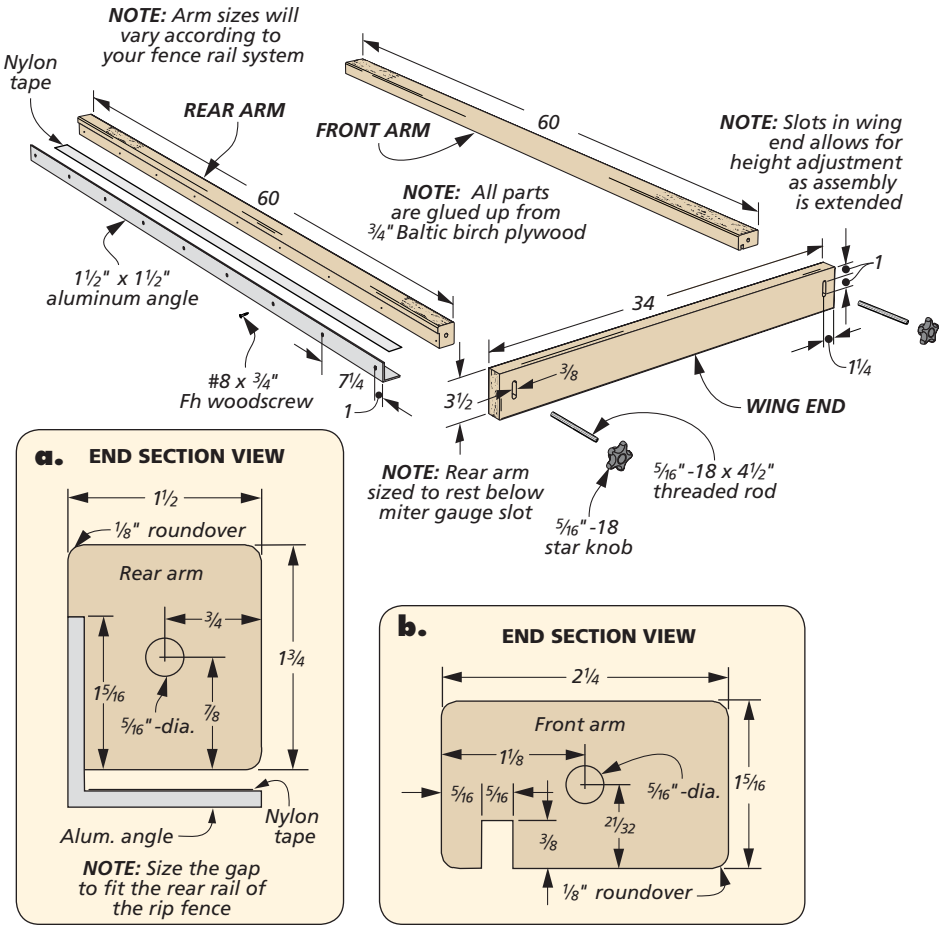

all about

beyond 90°

Tackling Angles

Most of the time, the goal in woodworking is achieving cuts that are straight and square. To that end, there's an arsenal of well-crafted hand tools capable of getting you there.

On occasion, though, you have to deal with angles. Whether it's making tapered or mitered parts for a project, or repairing a vintage piece of furniture to which the term "square" no longer applies, you need options that your trusty combination square is unable to tackle. No worries though, there are plenty of alternatives to consider. Let's start with the classic sliding bevel gauge.

▲ The *Bevel Setter* by *Veritas* is loaded with useful features. One side can be used to set your bevel gauge to a precise angle. On the flip side, there are guides for dovetail layouts and polygon angles, as well. The adjustable metal fence lets you use the tool for precise layouts.

SLIDING BEVEL. Tracking down any angle you need between 0° and 180° is easy with a sliding bevel gauge. This is a simple tool, really. It starts with a wood handle. At the top is a metal head that has a bolt with a wing nut. This holds a long metal blade. A slot in the blade mates with the handle and travels freely as needed. Just position the sliding bevel gauge against the object that you're working on, tighten the wing nut, and you've got the angle (refer to the main photo above).

Now that you have your angle, what are you going to do with it? For starters, you could use it directly in tandem with whatever machine you'll be using to make the cut you need. The bevel gauge will work with any number of

tools — your band saw, table saw, miter gauge, and drill press, to mention a few.

MULTI-TASKING MASTER. A sliding bevel gauge is great when you're duplicating an angle. But when it comes to laying out an exact angle, I rely on an angle ally that can't be beat.

The *Bevel Setter* by *Veritas* is a tool for angles that covers many bases (lower photos, previous page). One side of the tool features angles from 0° to 60° nicely etched into the surface. On the flip side, there are markings for dovetail and polygon miter layouts. An inch ruler along both edges come in handy too.

Made of heavy-gauge stainless steel, this tool has a slot in the center for a stout metal fence that stays put by tightening a knurled brass knob. The clever part is that the tool functions as either a protractor or its own layout tool.

BACK TO BASICS. If you're not in the market for such a tool, the simple protractor from *General Tools* finds angles like the bevel gauge and can be used to set precise angles on a bevel gauge, (photo below). An arm centered on a half-circle is marked with degrees to 180°. It's easy enough to operate. By loosening the nut on the arm, you can rotate it to the desired setting, retighten the nut, and you're good to go. The only downsides to this tool are that the arm is a little too short for my liking, and the degree scale markings on the plate can be difficult to read.

▲ A great addition to any shop is a protractor head. This tool can be purchased on its own or in a set with the standard combination square and center-finding head. Also, rulers in 18" and 24" lengths are available for longer reaches on project parts.

PROTRACTOR HEAD. If you're working with angles on a regular basis, there's always the protractor head. Think of it like the big brother to your combination square. The quality of these heads varies by manufacturer. *Starrett* makes a wonderful protractor head that I've had in my shop for decades. You can see one of these sporting a 24" ruler in the photo above.

The head of this protractor has the same mechanism that your combination square has: A knurled knob that threads onto a milled rod, which in turn grabs the center groove in the ruler. As you slide the ruler into the protractor, simply rotate the blade to the setting you want. Once you've dialed that in, lock the blade in place by tightening the two knobs on the back side of the protractor.

DIGITAL DELIGHTS. As in the rest of life, the digital world is moving into the shop. In fact, it's been there for some time now. The two examples shown in the box at right are handy to have around.

From basic sliding bevel gauges to fancy, calibrated digital protractors, when it comes to managing angles in your shop, you have plenty of options to choose from. None of these are rare or hard to find tools. So if you're looking to add any of them to your shop, there are details for purchasing each one of them on page 67. W

▲ The protractor by *General Tools* has been around a long time in many shops. The steel plate and arm make transferring angles easy.

More Options: DIGITAL SOLUTIONS

▲ A digital protractor is a combination of a bevel gauge and protractor. This provides accurate angles quickly.

▲ The *Wixey* digital gauge "zeros" out first. Then it sets your angle accurately to within one-tenth of a degree.

making precision Stopped Cuts

One of the appeals of working at the router table is just how straightforward it is to use. Set the bit height and the fence, and you're ready to make one cut — or a dozen. For most tasks, you'll start at one end of a workpiece and proceed until the bit emerges from the end. However, you can also make stopped cuts at the router table, as well.

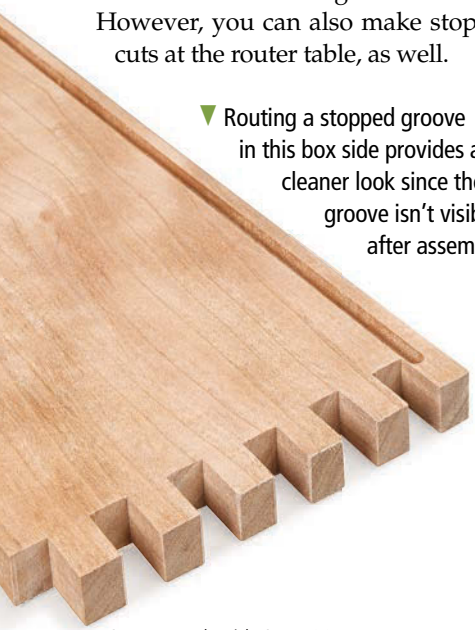

▼ Routing a stopped groove in this box side provides a cleaner look since the groove isn't visible after assembly.

A stopped cut is where a cut ends before running out one or both ends of the workpiece. In order to make this kind of cut, you have to lower the workpiece over a spinning bit, make the cut, and then stop at the right place. Although it may sound intimidating, I think you'll find that the differences from an ordinary cut are pretty minor.

Stopped cuts can be used for profiles as well as joinery cuts like rabbets, dadoes, and grooves. In this article, I'll demonstrate the process of making a stopped groove to accept the bottom for a small box, but the approach applies to most other stopped cuts, too.

The groove extends nearly to the ends of the box sides, but I don't want it to come out, so the starting and stopping points for the groove need to be right on. For precise work like this, I often set up a pair of stop blocks to control the cut.

SETTING UP. While stop blocks guarantee consistent limits of a cut from workpiece to workpiece, the blocks need to be located accurately. The drawings at the top of the next page show you the process. To get there, you need to start with a little layout.

After installing the bit and setting the height, position the fence in relation to the bit. It's a good idea to make a test cut to ensure it's right on the money.

At this point, you're ready to set up the stop blocks on the fence. The starting block on the right side of the fence is located so that the distance from the left edge of the bit to the stop matches the distance from the end of the workpiece to beginning of the cut (Figure 1).

The end block on the left side is set in a similar way. The only difference is that you'll use the right side of the router bit as the reference point when measuring, as you can see in Figure 2.

MAKING CUTS. At this point, you're all set to make a stopped cut. Here's where a little technique comes into play. As I said earlier, you lower the workpiece onto the spinning bit to make the cut.

The key is to do this in a controlled manner. You do that by turning on the router and bracing the back end of the workpiece against the right hand stop block, as shown in the main photo on the previous page. Hold the front end above the bit, while keeping the workpiece snug against the fence.

The first time I tried this technique, my fear was the bit would jerk the workpiece from my hands. Instead, you'll feel a slight pull as the bit engages the wood. A little pressure is all it takes to settle the piece firmly against the table. Then proceed like you would for any router table cut until the workpiece contacts the other stop block. (Like many router operations, it's a good idea to create deep cuts in several light passes, raising the bit slightly between each pass.)

The end of a stopped cut presents another set of choices. You can lift the workpiece off the bit — the reverse of how you started the cut. Or you can hold the piece in place, turn off the router and wait for the bit to stop. Do what feels most comfortable to you. I usually will lift the piece away if the cut is shallow.

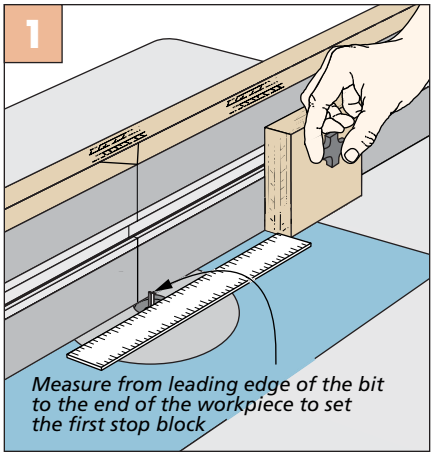

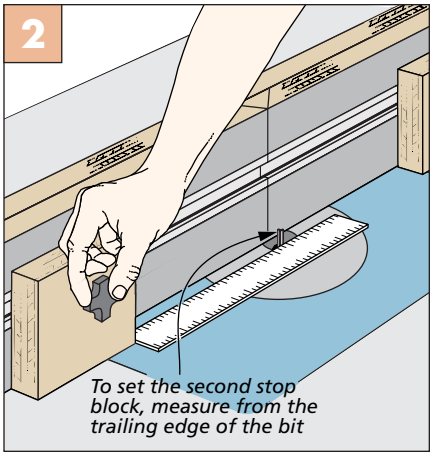

But for deeper cuts, I'll turn off the router first, then remove the workpiece.

ALTERNATE TECHNIQUE

Using stop blocks to start and end a cut works great. However there are a couple of limitations. It isn't possible to use stop blocks if parts extend beyond the ends of the fence. Also, if you're only making a few cuts, taking the time to set up stop blocks may not be worth the effort.

The solution is to use a slightly different technique. The drawings at the bottom of the page cover the main steps. In this method, you align marks on the workpiece with marks on the router table fence to begin and end a cut.

The first step is to do a little layout work marking the starting point and ending point of the cut on each of the workpieces. To make them useful, these marks are drawn on the opposite (upper) face of the workpiece than where the cut is made. You can see how this is done in Figure 1 at left.

After setting the position of the router table fence, you need to mark the cutting edges of the bit on the fence faces, as shown in Figure 2. Extend the lines up the fence a few inches so they're easily seen during the cut.

Making the cut is a matter of holding the workpiece against the fence with the leading end raised above the bit. Align the starting layout mark on the workpiece with the left bit mark on the fence, as you can see in Figure 3.

Lower the workpiece until it rests solidly on the table and push it forward along the fence until the end layout mark aligns with the right bit mark. This is shown in Figure 4.

FINAL CONSIDERATIONS. Due to the nature of starting and stopping a cut in a workpiece, don't be surprised to see some burn marks. In a cut like the stopped groove shown here, burned ends won't affect the joint's strength — or be visible.

Safety, accuracy, and convenience are big benefits to working at the router table. Using it for stopped cuts takes advantage of all three. And it opens up new opportunities to get more from your router table. W

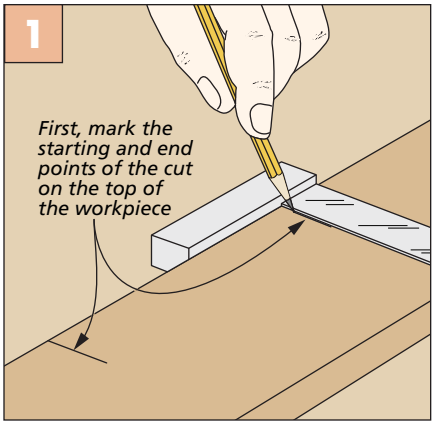

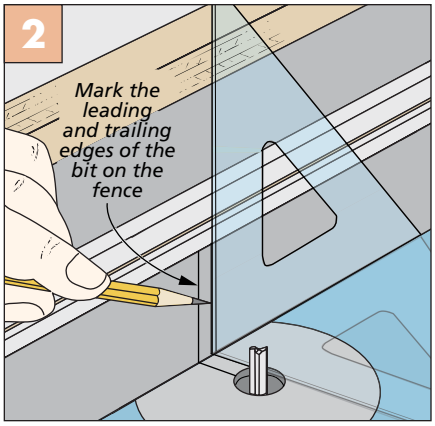

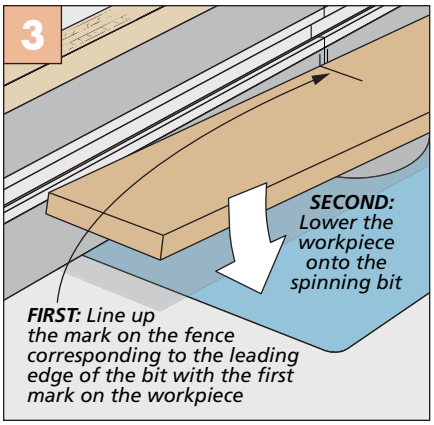

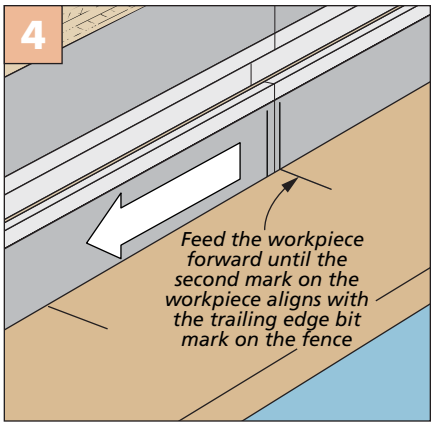

revolutionary routing: PowerLift Pro

If you're familiar with using a router lift in a router table, you know how handy it can be. Tasks like changing bits or adjusting bit height can be done above the table, rather than stooping below it.

With their new *PowerLift Pro*, *MLCS* has taken the concept of a router lift to a new level. The *PowerLift* is similar to other lifts but has two key additions: A motor that mechanically raises and lowers the router, and a digital readout that allows you to monitor and adjust the bit height. And these additions will change the way you look at router lifts.

HOW IT WORKS. Like other router lifts, the *PowerLift Pro* features an adjustable aluminum carriage attached to an insert plate that holds a router motor. The insert plate fits in a *MLCS* router table, though other tables can be built or modified to accommodate the plate.

The lift will accept a 3¼-hp router, or reducer rings are available to allow it to hold smaller routers. You can also purchase a router motor from *MLCS* using the source information on page 67.

The carriage slides up and down on a pair of smooth, steel rods, while a threaded rod allows for height adjustments (inset photo above). And like other lifts, you can change the bit above the table (upper left photo, next page).

With most router lifts, however, the carriage moves because the user rotates the threaded rod with a hand crank. On the *PowerLift Pro*, a motor with a belt turns the rod, raising or lowering the router carriage (lower photo, next page). A foot pedal and control box (left photos) are

▲ The *PowerLift Pro* app on an *Android* tablet lets you "zero out" the bit, set the bit at a precise height, and control motor speed.

▲ A foot pedal lets you raise or lower the router bit while you hold the workpiece securely with both hands.

As with other router lifts, the *PowerLift Pro* allows you to make bit changes above the table quite easily.

To get started using the lift, you set the bit flush with the router table top and then hit the "Set Zero" button in the app.

Micro switches installed at the top and bottom of one of the rods stop the travel of the lift as it moves up and down.

connected to this motor with electrical wires. The control box can be mounted above the surface of your table on a steel arm (main photo, previous page).

Near the bottom and top of one of the rods, the *PowerLift* features micro switches. These stop the up and down travel of the lift and prevent straining the lift motor (upper right photo).

AN APP FOR THAT. With just the foot pedal and control box, you can raise and lower the router mechanically.

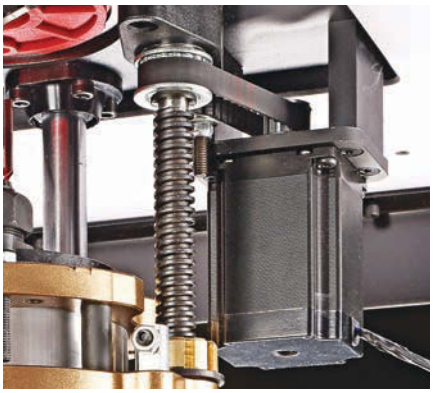

The *PowerLift Pro*'s motor connects to a threaded rod with a belt, letting you raise and lower the router mechanically.

But what really makes this router lift unique is the *PowerLift Pro* app. Available for *Android* phones and tablets, this app adds a ton of functionality to your router lift. *MLCS* sells a tablet loaded with the app along with the lift for an additional $35. Or you can load the app on your own device. The tablet connects to the lift's electronic control box with a USB cord.

The app allows you to adjust the lift by pressing buttons on the screen. You also can control the speed of the lift motor. But the most important thing it does is provide an accurate measurement of the bit height. To do this, you set the bit flush with the surface of your router table, and then hit the "Set Zero" button in the app (upper middle photo). After that, the app will provide an accurate measurement of its height as you raise or lower the bit.

The app has several preset height settings, such as 1/16", 1/8", and 1/4", among several others (refer to the lower left photo on the previous page). So if you cut a lot of 1/4"-deep dadoes or grooves, just hit the 1/4" button, and the bit raises precisely 1/4". Then you can increase or decrease the bit height from there in specific increments.

For custom settings, you can also set "memory positions" with the app. Just raise the bit to the height needed for a cut and save it as a "memory position." The next time you need to make a cut at that depth, just hit a button. I found this handy for cutting mating parts for joinery.

NEW ROUTING OPTIONS. You're probably already getting a good sense of how the *PowerLift Pro* can add some efficiency and accuracy to your router table work. Dialing in precise settings is just a button push away.

But, perhaps most uniquely, the hands-free nature of the lift also allows you to perform operations that were difficult or impossible before. For example, you can cut mortises or stopped dadoes by raising the spinning bit into the workpiece with the foot pedal and holding the workpiece securely with both hands. Refer to the drawings below for more on this.

At $500 ($535 with a tablet), the *PowerLift Pro* is no small investment. But for the ways it changes work at the router table, it might be worth it. W

How-To: ROUT A MORTISE

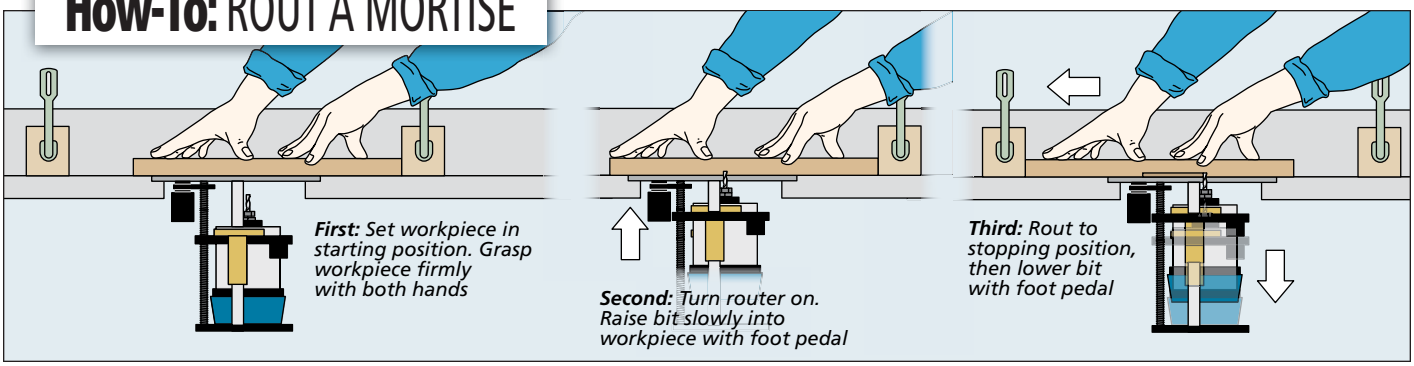

hand-cut Dovetails

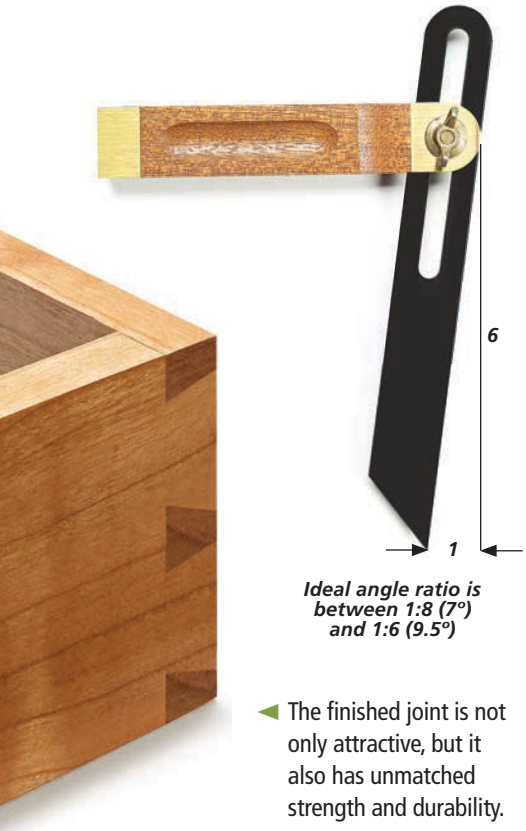

Ideal angle ratio is between 1:8 (7°) and 1:6 (9.5°)

◄ The finished joint is not only attractive, but it also has unmatched strength and durability.

Dovetail joinery made with a router and jig is the go-to method for many woodworkers. And I'll admit, it's my preference as well, especially if I'm working with more than a handful of project parts. It's just hard to beat the level of uniformity that can be achieved using this method.

But if there is one drawback to machine-cut dovetails, it's that it requires a fair amount of time to get a router dovetail jig set up properly before you can make the first cut. So for situations where I only need to join a few parts (like the till for the steamer trunk on page 42), it often makes sense to go with hand-cut dovetails.

If you've never cut a dovetail joint before, the premise is simple: On one board, there are a series of wedge-shaped openings that "fan out" at the end to form the tails. On the other board, there's a matching set of corresponding pins that interlock with the tails.

Due to this wedge design, the joint will only slide together in one direction, creating an incredibly strong connection. And while it does take a little practice to get the proper method down when hand-cutting dovetails, the results (and satisfaction) are well worth it.

ANGLE CONSIDERATIONS. Before jumping right in and getting to work, a few decisions must be made up front. And that starts with what angle to make the dovetails. If you're working from an existing plan (like I'm showing in this article), then the decision is already made for you (8° for the trunk's till).

When creating original work, it's best to keep the angle ratio between 1:8 (7°) and 1:6 (9.5°), as shown in the photo at left. If the tail angles are too shallow, you'll lose the classic dovetail look (not to mention holding power). And if they're cut too steep, they'll appear exaggerated and be prone to chipping.

PINS OR TAILS FIRST? Along with the angle choice, it's best to decide which side of the joint you'd like to make first, the pins or the tails. Traditionally, many craftsmen would lay out and cut the

pins first. There are a couple of reasons for this. First, the pins are generally perceived as being easier to cut (and easier to square to the baseline if they are off a little bit). Second, it's very easy to lay out the tails using the completed pin board as a guide.

Another school of thought advocates for cutting the tails first. The reason for this method is that the tail layout is somewhat easier to figure out. Plus, the tail layout on the face of the board gives a visual representation of the joint's final appearance, allowing you to make any necessary adjustments before any wood is cut.

Personally, I prefer to do all of the layout work on both the pin board and the tail board before breaking out the saws and chisels. This is especially true when the dovetail joint I'll be making only has a couple of tails and just a few pins, like the one shown in this article. With everything laid out up front, I can focus on one operation at a time. And when it's time to remove the waste, it doesn't really matter if I start with the pin or tail board.

STOCK PREPARATION. Regardless of the method you choose, you'll want to start with square stock that's consistent in thickness. Any variation in thickness will throw off the layout process. After cutting my parts to size, I also take the time to orient my pieces for the best look.

LAYOUT

To avoid any confusion during the layout process, I start by spending a few minutes marking which boards receive the tails and which get the pins. I also indicate the top edge and both faces of each piece, along with a letter to designate the mating corners, as shown in Figure 1 below.

BASELINE. Next up, a baseline serves as a "depth stop" for how deep to cut the pins and tails. If you're new to this process, it's best to use a marking gauge set just slightly thicker (1/64") than the workpiece to mark the baseline shoulder (Figure 2). This will make the pins and tails proud of the sides when they're assembled, and can be sanded smooth.

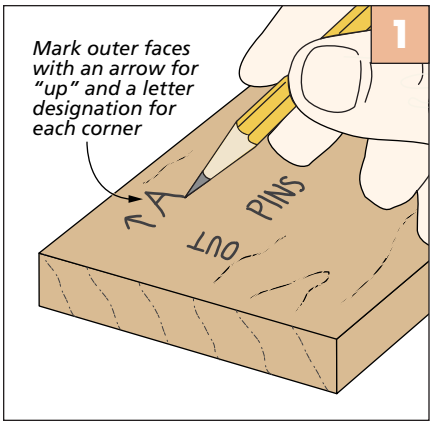

Labels. After arranging the pieces as they'll be positioned, mark the outside face, the upper edge, and a letter to designate the corresponding corners.

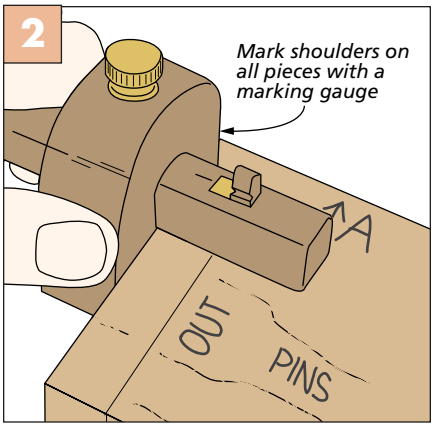

Baseline. A shoulder line marked on all four sides of each workpiece serves as a reference to indicate how deep you'll need to cut the tails and pins.

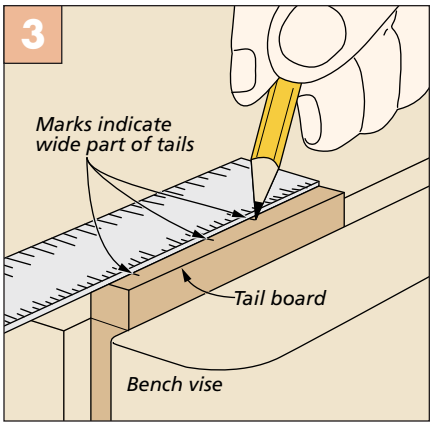

Tail Layout. With one tail board clamped in a vise, use a metal rule to mark the wide part of the tails on the end of the workpiece.

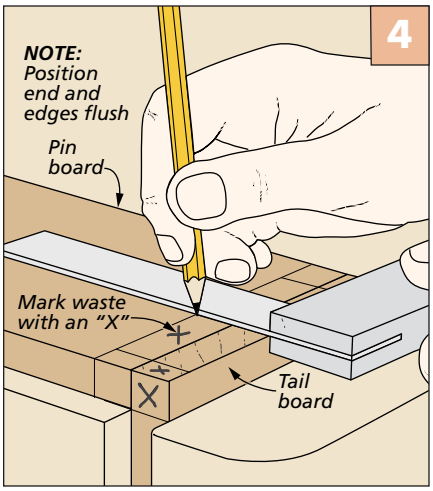

Double Layout. With the tail board still in the vise, butt the pin board against it and mark the layout lines on both pieces. Mark the waste with an 'X.'

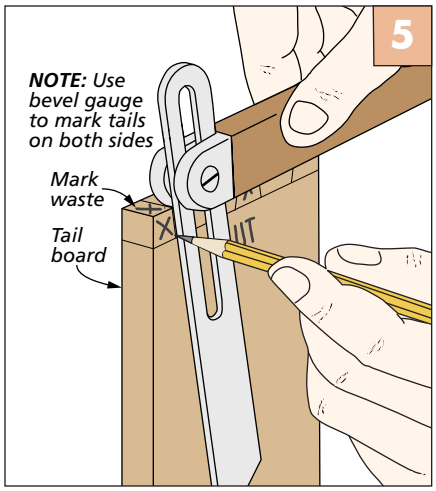

Mark Tails. Using a bevel gauge set to the correct angle, mark the sides of the tails. Flip the workpiece around and mark the other face, as well.

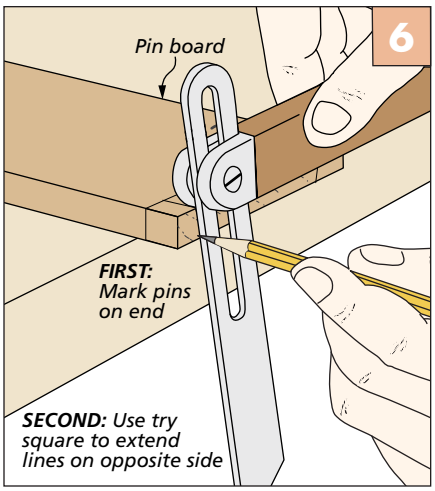

Mark Ends of Pins. Leaving the bevel gauge at the same setting, mark the end of the pin board. Use a try square to continue the lines on the other face.

Another option is to use the workpieces themselves as guides to mark the baseline around the face and edge of each part. For this method, you simply butt one piece flush against the end of the other and mark the line. This method, however, leaves less room for error.

MARKING PINS & TAILS. Figures 3 through 6 on the previous page will show you the sequence for the rest of the layout process. I start by placing the tail board in a vise and marking the widest part of the tails on the end of the board using a ruler, as shown in Figure 3.

With the tail board still in the vise, you're ready to butt the pin board tightly against it and draw layout lines across both pieces (Figure 4). Be sure to mark the waste areas with an "X".

Now raise the tail board up in the vise. Using a compass, set a bevel gauge for the tail angle (8° for the till parts), and draw the lines that mark the sides of the tails. You'll do this on both faces of the workpiece, as shown in Figure 5.

Finally, lay the pin board flat on the workbench, and using the same bevel gauge setting, draw angled lines across the end of the piece (Figure 6). Then use a square to continue the lines on the opposite face of the workpiece, down to the baseline.

REMOVING THE WASTE

With the layout work complete on both the pin and the tail board, you can now remove the waste sections. Whichever workpiece you begin with, the process is much the same.

You'll start by establishing the face cuts of the pins (Figure 1, below) and the tails (Figure 3), being sure to stay about 1/64" to 1/32" to the waste side of the cut lines. For the tails, you'll need to tilt the saw to match the angle of the tail walls. Also, to provide a visual stopping point, I use a scrap piece as a stop block. It gets held in place with a couple of C-clamps.

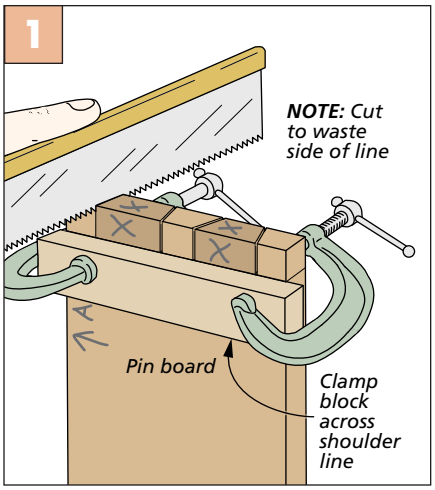

Face Cuts. Using a dovetail saw, establish the face of the pins by cutting just to the waste side of the layout lines. Cut down to the stop block.

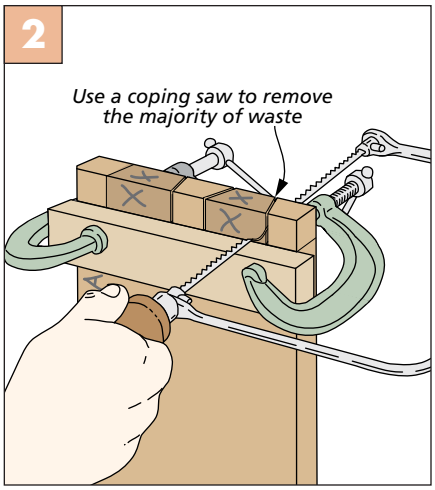

Coping the Waste. After making the face cuts, remove the rest of the waste with a coping saw. Again, you want to stay just proud of the layout lines.

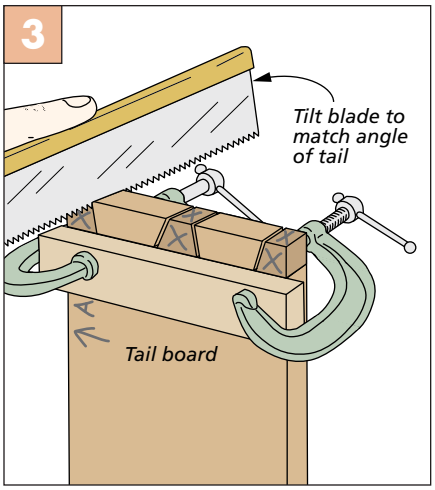

Tilt for Tails. To make the face cuts on the tail board, tilt the saw to match the angle of the layout line. A few practice cuts on a scrap piece are in order here.

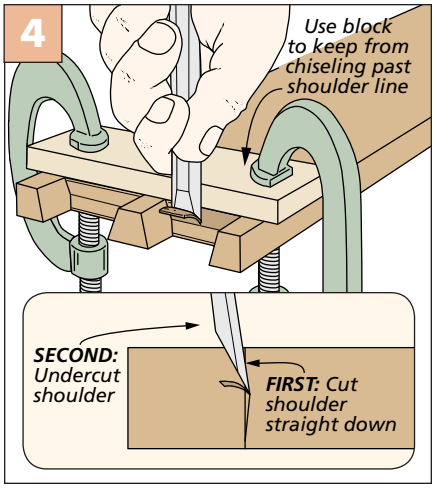

Chisel Work. With a scrap clamped across the shoulder line, make a shallow, 90° cut. Then make a V-shaped undercut in the bottom of the opening.

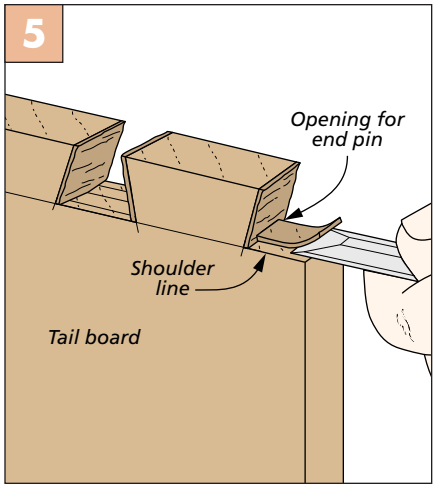

Pare Pin Openings. For a tight fit, the openings for the end pins on the tail board aren't undercut. They should be pared flat with the shoulder line.

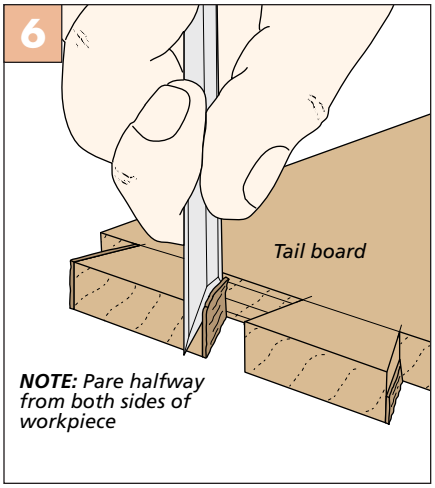

Trim Tails. Trim the sides of the tails (and pins) up to the layout lines. Work from both sides of the workpiece to avoid chipout on the opposite face.

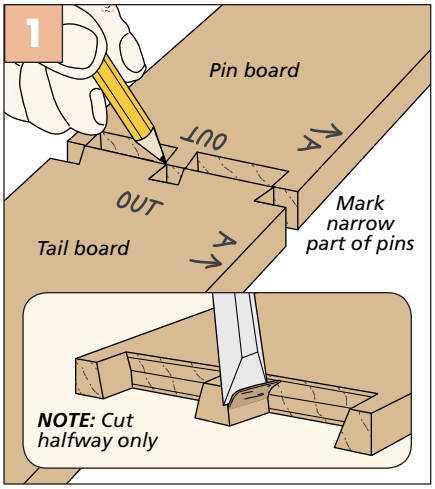

Narrow Pins. Check that the narrow part of the pins will fit the openings on the outside of the tail piece. Mark the pins and pare off any excess material.

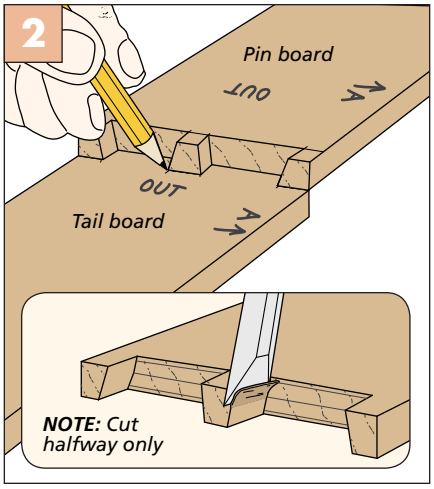

Wide Pins. Now position the wide part of the pins above the wide part of the opening in the tail piece. Once again, mark the pins and trim off any excess.

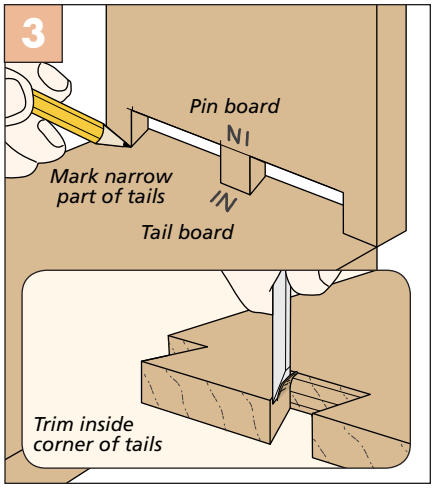

Check Inside Face. Next, check that the wide part of the pins fits the openings on the inside face of the tail board. Mark the tails and trim as before.

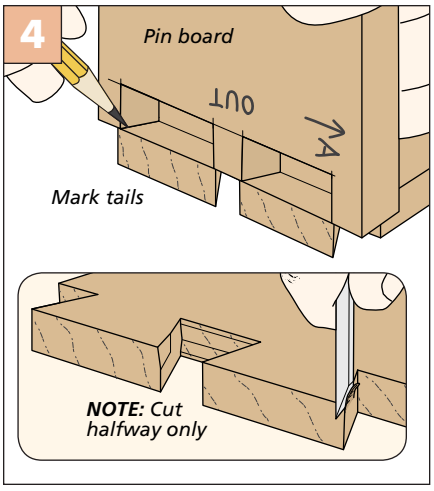

Check Outside Face. If the narrow part of the pins won't fit the openings on the inside face of the tail board, mark and trim the excess material once more.

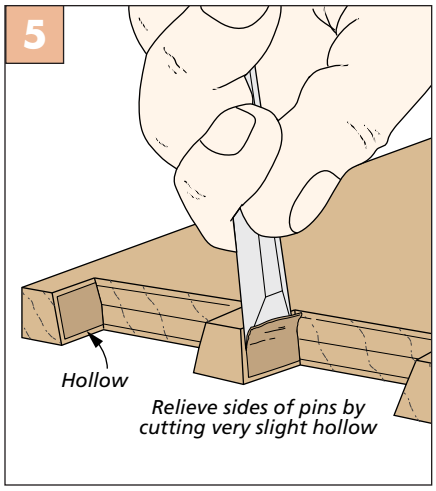

Hollow Faces. To ensure a snug fit without affecting the appearance, form a hollow on the sides of the pins. Be careful not to cut the edges of the pins.

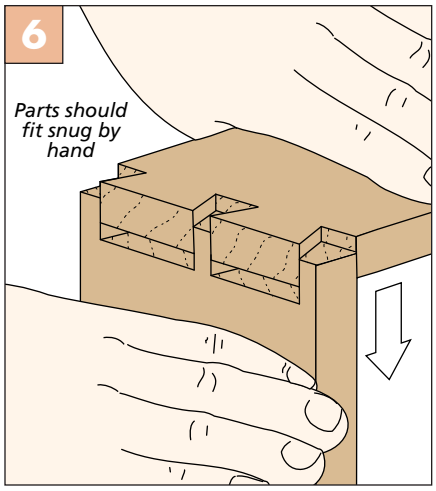

Test Fit. If the joint won't go together with hand pressure, you can use a wood block and mallet to give it a few taps. Just don't overdo it.

Now you can switch to a coping saw to free the rest of the waste, as shown in Figure 2 on the previous page. Again, you want to stay to the waste side of the layout lines. Do this same procedure on the pin and the tail boards.

CHISEL WORK. Figures 4 through 6 show the remaining steps for finishing one dovetail joint. Again, a piece of scrap wood is clamped across the baseline to guide the chisel (Figure 4). Work toward the center from both sides of the workpiece, being sure to just "split" the layout lines. A slight undercut helps create a tight fit (Figure 4a). However, don't undercut the end pins on the tail piece (Figure 5). This would create a gap when the joint is assembled. Figure 6 shows the last step for cleaning up the tail walls.

FINE-TUNING THE JOINT

With enough practice, the test fitting part of the process will become increasingly unnecessary. But if you're just starting out, it's best to go through the process shown in Figures 1 through 6 above. You'll end up with a tight-fitting joint without having to force the pieces together and possibly causing damage.

First, orient the boards as shown in Figure 1. Then, check that the narrow part of the pins will fit the openings on the outside of the tail piece. Mark any excess on the pins and pare off the waste. Now do the same process for the wide part of the pins (Figure 2).

Next, you'll flip the pieces so the inside faces are held at a 90°, as shown in Figure 3 and 4. Check the fit, and pare away any excess. Forming a slight hollow on the sides of the pins allows the pieces to go together a little easier without affecting the fit (Figure 5).

The final test fit, as shown in Figure 6, should go together with minimal resistance. A little glue on the leading edges of the pins is enough for assembly. W

Weekend Project

perpetual Wall Calendar

Easy to build and simple to rearrange, this will be the last calendar you'll ever need. The classic styling works well in many settings.

Over the years, I've had a couple of perpetual calendars — the small ones that require you to change the date every day. They're clever enough, but those things turn into work. Before I know it, I'm three weeks behind. Who needs guilt from a calendar?

This calendar has a lot more going for it. It's got a classic look that blends in with a lot of décors without demanding too much attention. And you're not a slave to a daily routine of calendar care. All you have to do is shuffle a couple of tiles once a month, and you're good to go.

The wall calendar is built from two kinds of wood. I chose poplar for the main parts of the calendar because it sands easily and takes paint well. The tiles (both the months and the days) are made out of maple. When finished with a clear coat, they provide a nice contrast.

Materials, Supplies & Cutting Diagram

A	Back (1)	3/4 x 16 1/2 - 29 13/16
B	Tray Sides (2)	1/2 x 1 3/4 - 2
C	Tray Front (1)	1/4 x 2 - 13
D	Tray Bottom (1)	1/8 x 1 3/4 - 12 1/4
E	Cap (1)	1 1/2 x 5 rgh. - 18 7/8
F	Tile Guides (7)	3/4 x 1/2 - 14 3/4
G	Month Tiles (6)	1/4 x 2 1/2 - 11 1/2
H	Day Tiles (31)	1/4 x 2 - 2 5/16

- (21) #6 x 7/8" Rh Woodscrews
- (4) #6 x 1 1/4" Rh Woodscrews
- (25) #6 Washers
- (2) 1" L-Hooks

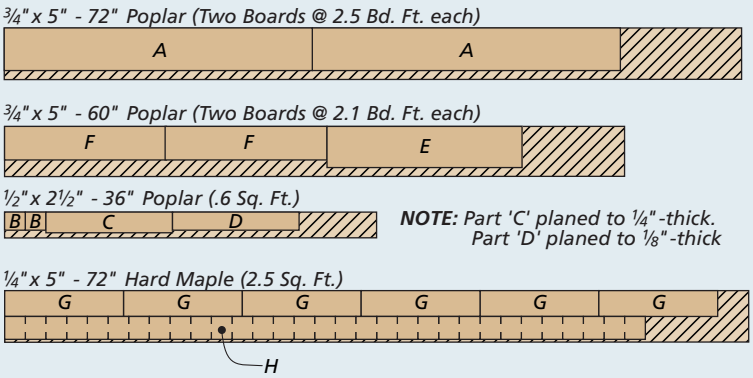

Start with a **PANEL**

The back of the calendar is a panel glued up from ¾"-thick poplar boards. Before you start shaping the back, lay out and drill the holes for the storage tray and tile rails. The drawings on the right show you where to locate the screw holes. Since the back is made out of solid wood, it's best to allow for the potential of wood movement. So I oversized the pilot and counterbore holes.

To give the back a little character, there's a simple mirrored profile that runs up both sides. This profile starts with an arc at the base, travels upward for a distance, and ends in another arc, creating a wider top that a cap molding will sit on (refer to detail 'a').

For the long, straight part of this profile, a quick rip at the table saw is the sure path to a straight side. All you have to do is make a stopped cut. The key to a good stopped cut is carefully laying out your stopping points. Figure 1 in the box below shows how to do this.

To remove the waste, I completed the cuts at the band saw, which is detailed in Figure 2 below. Once that was done, I sanded both edges smooth.

TONGUE & GROOVE. An arched tongue runs across the top to provide a secure attachment point for the cap. Cutting the arc and the tongue is straightforward enough. The steps are shown in Shop Notes on page 66.

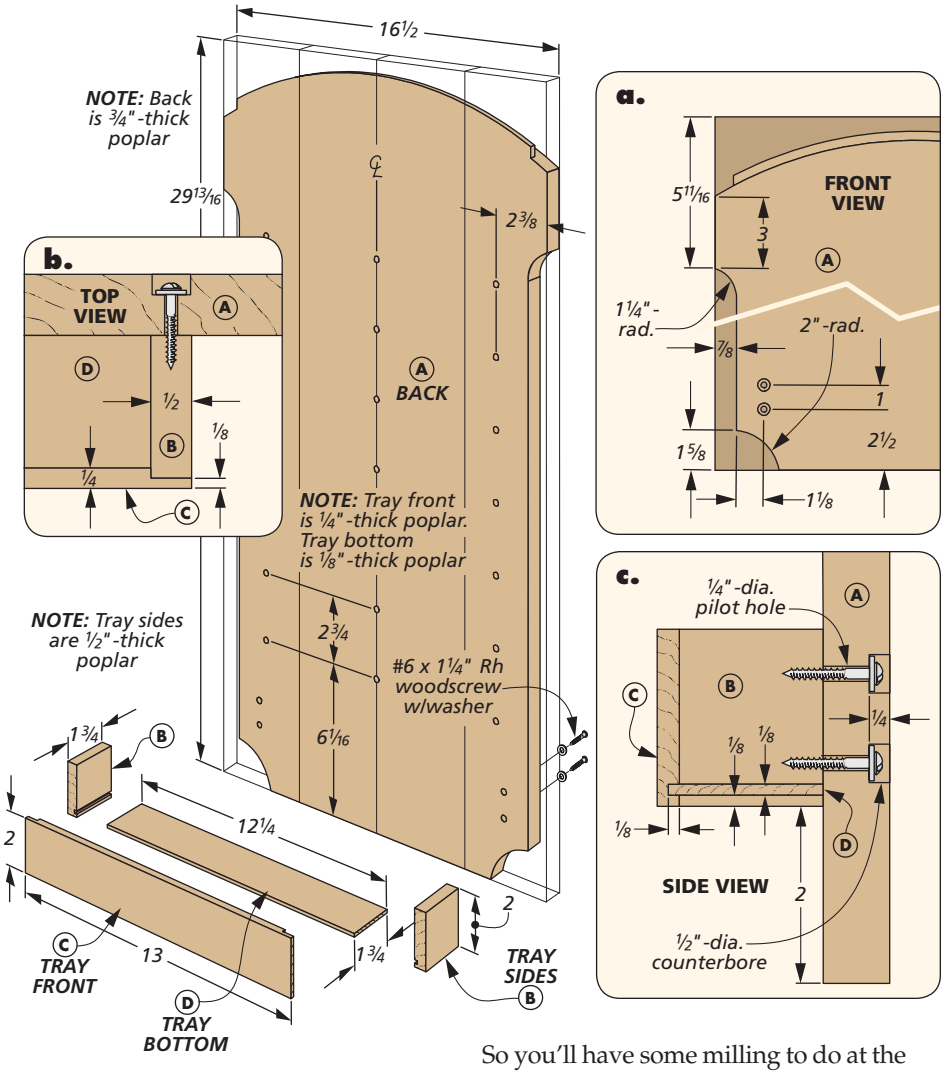

THE STORAGE TRAY. The storage tray provides a handy place to store the extra month tiles when not in use. As you can see in the drawing above, it is just a simple little box. But looking closely, you'll notice that there's no plywood bottom. Instead, all the parts are poplar. So you'll have some milling to do at the planer in preparation for making the tray. Once that's done, cut the grooves in the front and sides to hold the bottom. Next, make the rabbets in the front for joining to the sides, as in detail 'b.'

After you've glued up the tray, you can set it aside for now. Later, you'll screw it to the back, as detail 'c' shows.

How-To: CREATE THE PROFILE

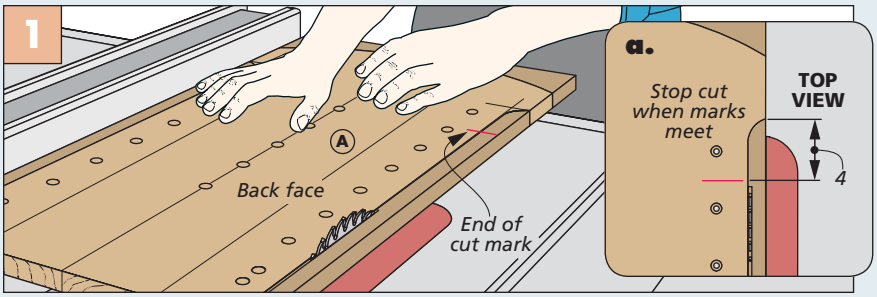

Go and Stop. When the front edge of the saw blade meets the lines that represents the base of the curve, stop the saw. Then back out the workpiece, and repeat the process on other side.

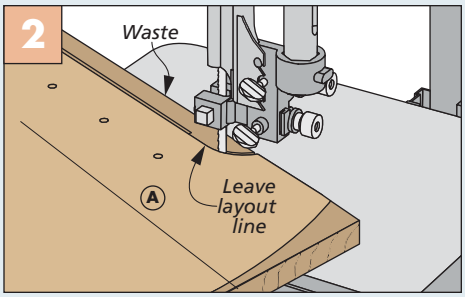

Cutting the Arcs. At the band saw, rough-cut the four arcs. Stay outside of the layout lines, then sand smooth.

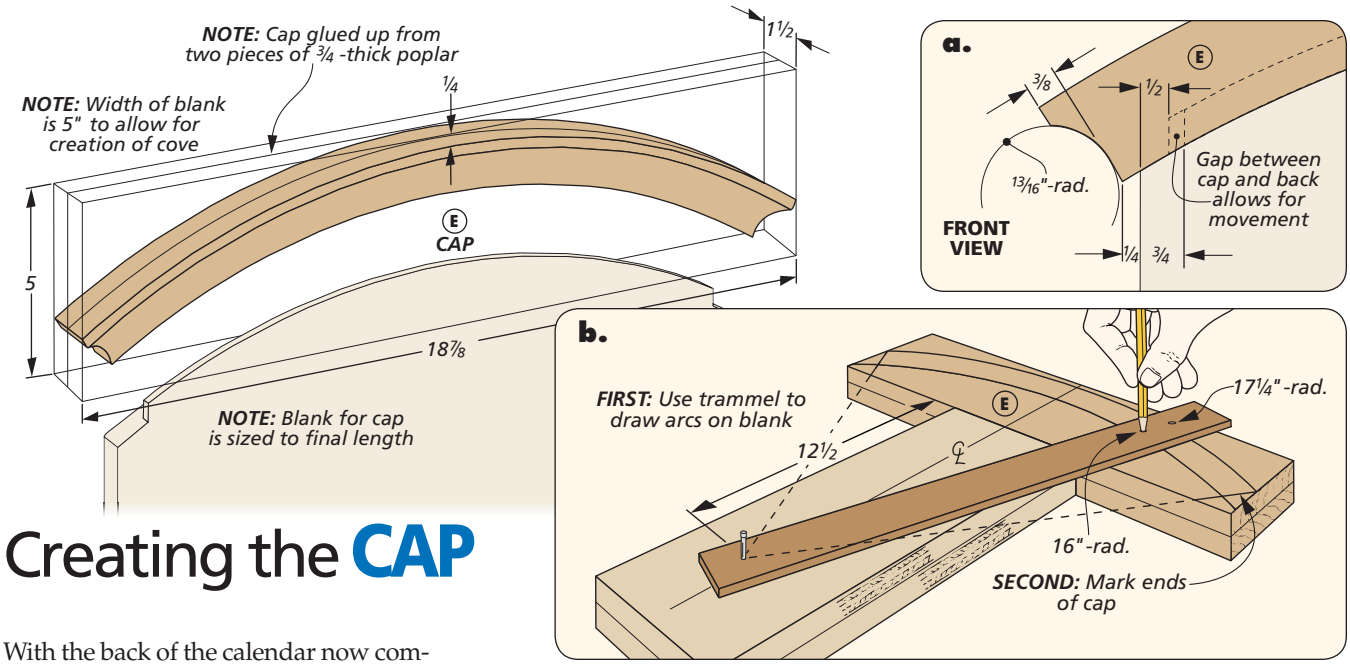

Creating the CAP

With the back of the calendar now completed, you can move on to the cap. The extra thickness of the cap visually offsets it from the back of the calendar. The cap is made of two pieces of poplar glued face to face, as shown in the art above. I cut this blank to final length but left it extra wide. This provides clearance to create the layout and rout the profile.

LAYOUT FIRST. First up is a little bit of layout work. There are two arcs creating the top and bottom of the cap. The bottom one has a 16" radius. This is the surface that houses the groove that mates with the tongue on the back. The top arc has a 17¼" radius, creating the crown of the cap. You'll want to center all of this on the blank that you made. The simple trammel setup shown in detail 'b' above brings all this in order. Once the arcs are drawn, strike a line from the endpoints of the top arc to the pivot point of the trammel. All this information is also shown in detail 'b.' Later, you'll trim to these end marks at the table saw.

With the layout done, I cut out the inner arc at the band saw and sanded it smooth. Don't cut the top arc yet. It's easier to work on the cap with one side of the blank square. Before moving on, I transferred the end marks down the face of the inner arc and drew my stopping points for the groove, Figure 1.

GROOVE NEXT. Now you can focus on the groove. A ¼" slot-cutting bit in the router table is just the ticket needed for this operation. The groove begins and ends at the stopping points you just laid out (Figure 1). Don't worry if this groove goes a little longer than the stopping points. That won't be a problem. As detail 'a' shows, there's a gap between the cap groove and the back tongue. Just test fit the cap to the back and make any needed adjustments.

TRIM ENDS. The next step requires a trip to the table saw. Here, adjust the miter gauge to the proper angle and trim the cap to its final length, as Figure 2 shows. These cuts give you a surface for transferring the cove profile as it's shown on the next page in Figure 3a.

How-To: FORM THE CAP

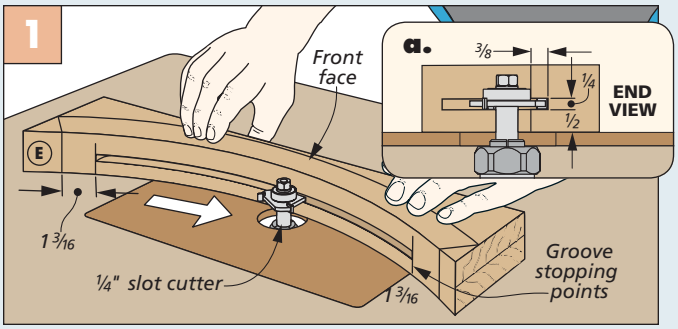

Groove First. Use the layout lines you extended down from the face of the piece to accurately locate the groove stopping points. Then route the groove.

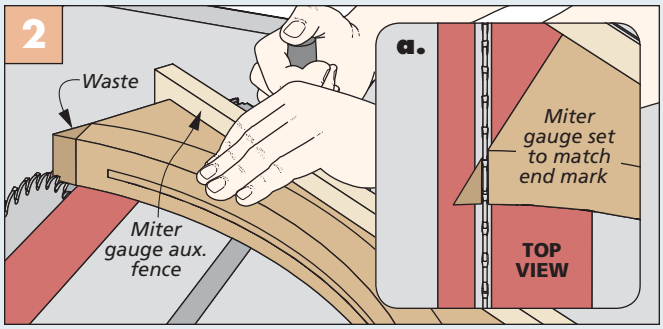

An Accurate End. Rotate your miter gauge to match the angles that you've drawn on the ends of the cap. Then trim the ends to establish the final length of the cap.

COVE CREATION. The cove that's on the face of the cap is formed at the router table with a core box bit and a curved fence. The "returns" on either end of the cap are made at the band saw.

With the bit and fence set up at the router table as shown in Figure 3, you can start creating the face profile. This profile is made in several passes. The first pass will have the bit set at its highest point (Figure 3a). For the following pass, you'll lower the bit and back out the fence slightly, repeating this process until you've removed most of the waste (Figure 3b). Then you can clean up and soften the cove with a curved scraper and sandpaper.

COVE RETURNS. Creating the return profile is more art than science. It's just a matter of mimicking the face cove. To do this, position the cap on the back. Then, at a ¼" away from the edge of the back, as detail 'a' on previous page shows, draw an arc that matches the face cove. Cut these curves at the band saw, along with the arc that makes the top of the cap. Then you can sand the whole cap smooth. Next, glue the cap in place. It's best to only spot glue it 4" to 5" at the center of the cap to allow for wood movement.

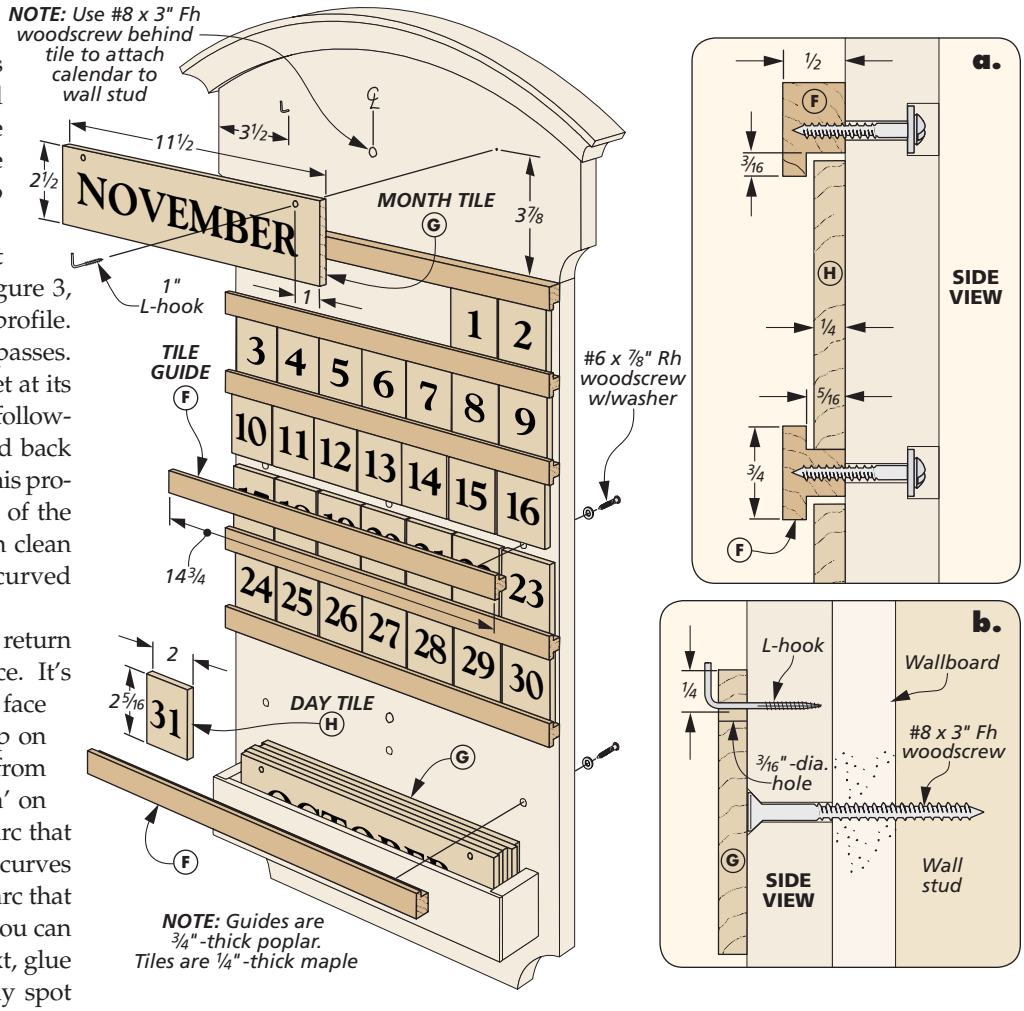

TILE GUIDES

To complete the body of the calendar, you'll do the tile guides next. The tile guides come in two variations: The top and bottom guides that are rabbeted on one side only, and the field guides which are rabbeted on both sides. These guides hold the days of the week. Both of these parts are simple but small. The details for making them are on page 66.

Once the guides are made, screw them in place through the counterbored holes you drilled earlier (detail 'a').

MONTH & DAY TILES. The tiles for the calendar are made from maple that's been planed to ¼" thick. Six pieces make up the month tiles. Each month tile has a month name stenciled on either side, which saves on storage needs for the unused tiles. Also, the month tiles require drilling holes to hang L-hooks in the calendar back (detail 'b'). Thirty one pieces are needed for the day tiles.

STENCILING. Once the finish was dry on the tiles, I moved on to the stenciling. I used a stencil set that I purchased online for the letters and numbers (page 67). Centering the numbers on the day tiles is pretty straightforward. But as for the month tiles, I did some test runs on pieces of paper cut to the size of the tiles. This let me determine the positioning before committing paint to tile.

With all of the building said and done, I mounted the calendar by screwing it to wall studs. Hiding these screws under the month tile and one of the rows of mid-month date tiles gives you plenty of flexibility for screw locations. W

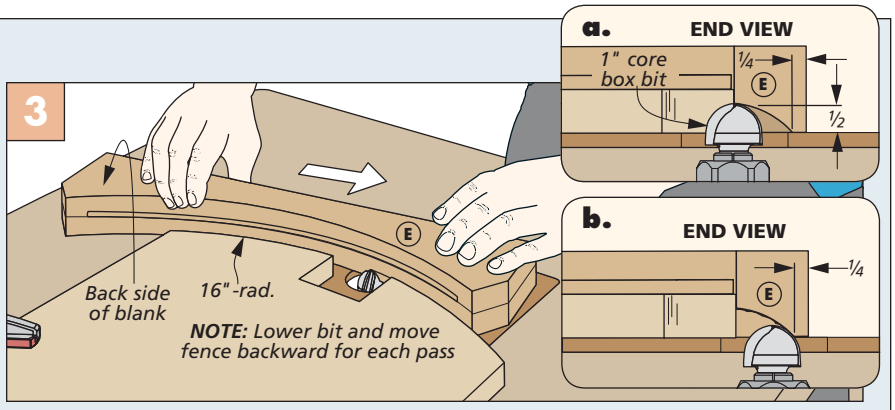

Careful Cove Creation. Using a fence provides confidence when it comes to making the cove on the cap. It supports the whole surface of the cap as you nibble away at the profile. Sand it smooth when you've finished routing.

BOSCH
RIDGID

One-Wall Workshop

3 Space-Saving Carts

These handy carts allow you to set up your space to suit the task at hand. Then they roll out of the way to free up more room.

In a nutshell, setting up a shop is all about creating a space to build projects. That requires solid worksurfaces and ample storage. Equally important is making a home for tools and projects in-progress. These three carts fit that role to a "T."

They're designed as trusty sidekicks to the one-wall workshop featured in the last issue. To save space, the carts roll under the workbench and workstation. I also think they would make great additions to just about any shop.

The assembly cart, router table, and flip-top cart all share the same construction DNA, which streamlines the building process. This means you can build them quickly and then get to work on your next project.

Start with the **ASSEMBLY CART**

▲ The assembly cart is built from MDF panels that unite to create a solid, heavy worksurface.

While you could start with any of the carts, I chose to build the low assembly cart first because it's the simplest. It also provides a good illustration of the construction method used in the other two carts. The carts are made primarily from MDF with some strategically placed solid-wood pieces for added reinforcement.

The assembly cart is sized to slip under the shelf of the workbench shown in issue No. 226. This low height also makes it ideal for having easy access to all sides of a project during assembly and finishing.

REINFORCED CASE. The side assemblies of the cart consist of two layers of MDF. The inner panel is a little smaller in both dimensions, as in the drawing below. When the inner panel is glued flush to the front and top edges of the sides, it creates a rabbet along the bottom and back. The rabbets register the case bottom and back panels, which are joined to the sides with glue and screws.

You'll notice the rabbet for the bottom is greater than the thickness of the MDF. The extra depth creates space for a pair of solid wood cleats (details 'a' and 'b'). Installing the "one-by" cleats stiffens the case bottom and serves as secure mounting points for the locking swivel casters.

A third inner panel is centered on the bottom and divides the interior of the case into two drawer compartments. This panel also supports the top. The main drawing and detail 'a' show that the top

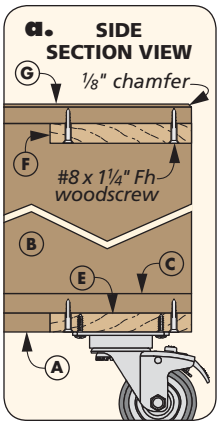

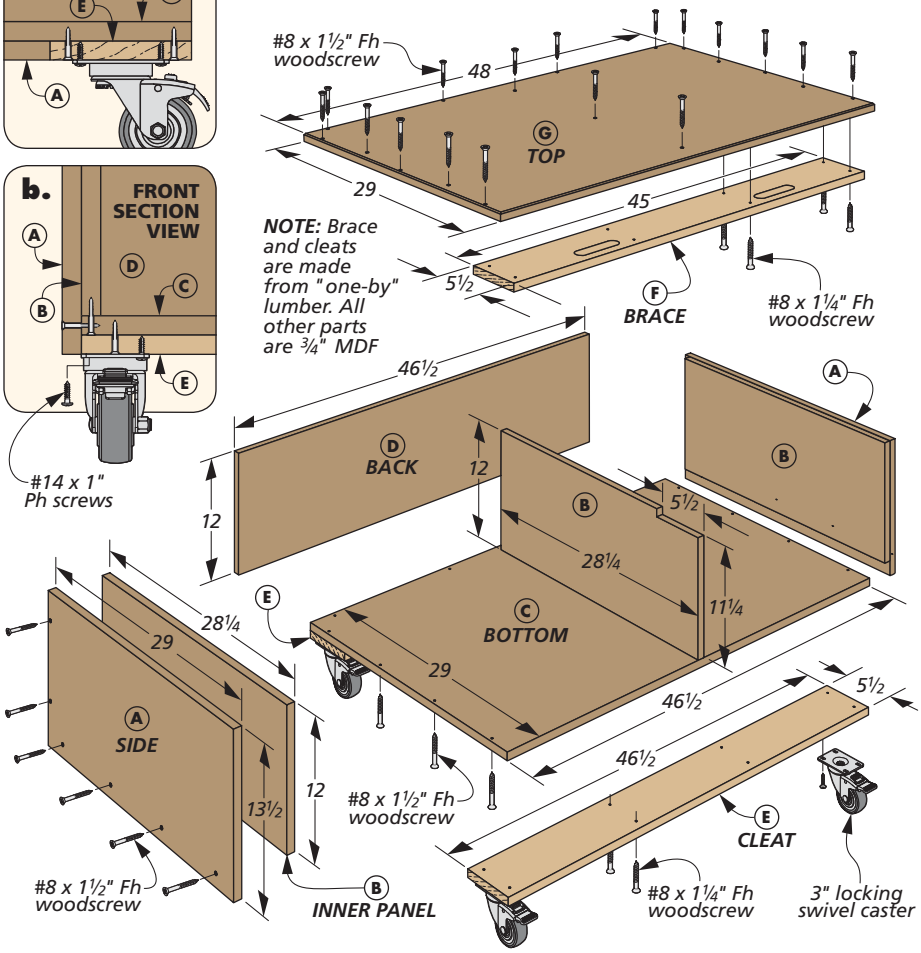

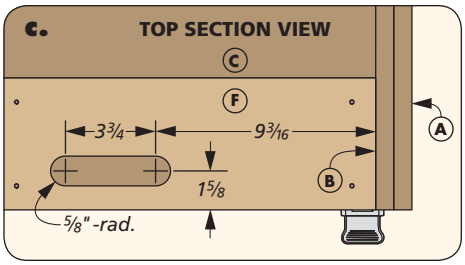

How-To: HANDHOLD

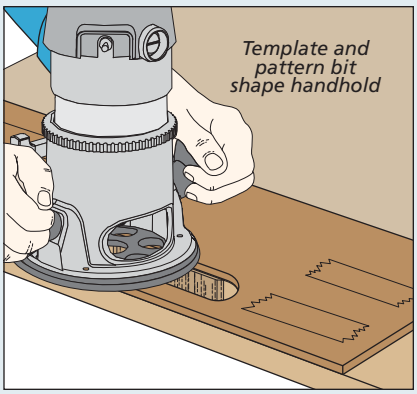

Template. Turn to page 65 for details on using a template to form the handholds in the brace.

of this panel is notched to accept a solid-wood brace. With the main case of the cart complete, now is a good time to seal the edges of the MDF pieces and prime and paint the cart. Page 67 has information on the paint color that I used.

BRACE & TOP. The top of the cart overlays the sides and back to create a smooth, continuous worksurface. As I mentioned earlier, there's a solid-wood brace screwed to the front edge of the top from underneath. The brace has a couple of handholds cut into it to make it easy to pull the cart out from its stowed position under the workbench, as shown in the lower right box on the previous page. You can find the technique for this on page 65.

I painted the bottom face and front edge of the brace before gluing and screwing it to the underside of the top, as in detail 'c' on the previous page. The top itself is also fixed to the cart with glue and screws. Then the edge is eased with a small chamfer, as shown in detail 'a' on the previous page.

TWO LARGE DRAWERS

A dedicated assembly surface is a big plus, but the drawers below double the benefits of the cart by increasing the storage space in your shop. The large drawers operate on full-extension slides that maximize access and are perfect for storing heavy, bulky items.

RABBETS. The drawer boxes are assembled with rabbet joints, as in the drawing above and detail 'a.' The bottom is held in a groove I cut at the table saw (box at right). At assembly time, the glued rabbet joints are reinforced with screws.

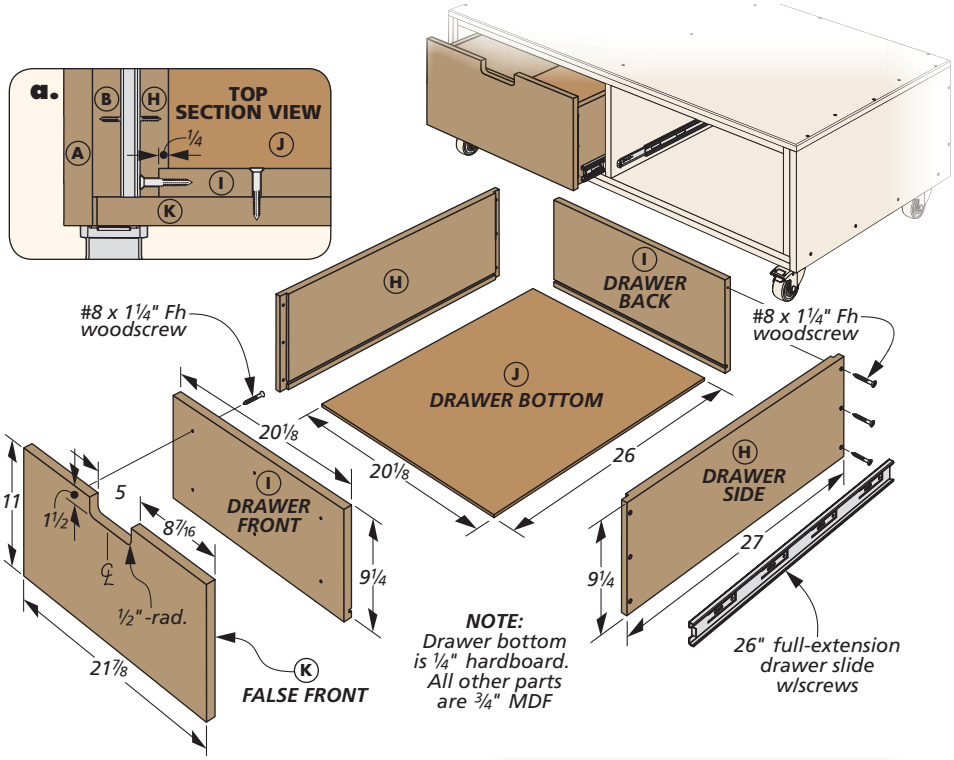

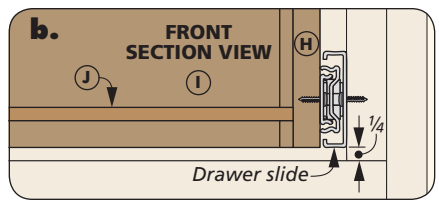

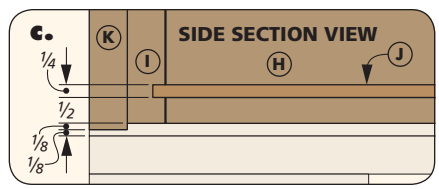

HANDHOLD. Painted false fronts complete the drawers. Cut out handholds to serve as pulls, as you can see in the drawing above. These openings are formed similarly to (and line up with) the handholds in the brace.

How-To: GROOVES

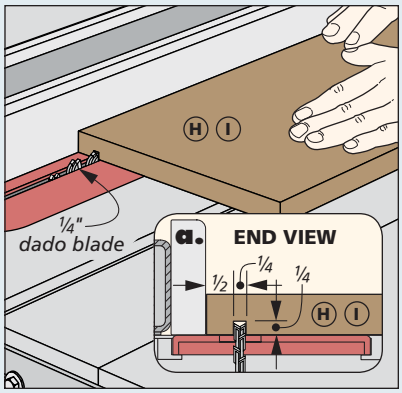

Drawer Bottom Grooves. Use a dado blade to cut the grooves for the drawer bottom at the table saw.

Materials, Supplies & Cutting Diagram (for the assembly cart)

A	Sides (2)	3/4 MDF - 13 1/2 x 29	**F**	Brace (1)	3/4 x 5 1/2 - 45	**K**	False Fronts (2) 3/4 MDF - 11 x 21 7/8
B	Inner Panels (3)	3/4 MDF - 12 x 28 1/4	**G**	Top (1)	3/4 MDF - 29 x 48	•	(44) #8 x 1 1/2" Fh Woodscrews
C	Bottom (1)	3/4 MDF - 29 x 46 1/2	**H**	Drawer Sides (4)	3/4 MDF - 9 1/4 x 27	•	(60) #8 x 1 1/4" Fh Woodscrews
D	Back (1)	3/4 MDF - 12 x 46 1/2	**I**	Dwr. Frts./Bks. (4)	3/4 MDF - 9 1/4 x 20 1/8	•	(2 pr.) 26" Full-extension slides w/Screws
E	Cleats (2)	3/4 x 5 1/2 - 46 1/2	**J**	Dwr. Bottoms (2)	1/4 Hdbd. - 20 1/8 x 26	•	(4) 3" Locking Swivel Casters
						•	(16) #14 x 1" Ph Sheet Metal Screws

1x6 - 96" Fir

1x6 - 48" Fir

ALSO NEEDED:
One 49" x 48 1/2" sheet of 3/4" MDF
Two 49" x 97" sheets of 3/4" MDF
One 24" x 48" sheet of 1/4" hardboard

The flip-top TOOL CART

The second cart to take a look at is the flip-top cart. The top isn't fixed in place. Instead it's designed to flip a full 180°. In essence, it gives you two carts in one.

If you attach a benchtop tool, like the thickness planer shown here, to one surface of the cart, you have a roll-around tool stand. But once you unlock a couple of slide bolts, you can flip the top over for a bonus worksurface. Flipping the tool under also lets you roll the cart under the workstation. What's nice is the mechanism to make this work is pretty straightforward (more on this in a bit).

At a glance, this flip-top cart seems quite a bit different from the assembly cart. But as you'll see on closer examination, there are quite a few similarities.

A TALLER CASE. If you compare the drawing of the case below with the assembly cart, you'll see many of the same parts — they're just sized differently. Tall case sides have supports glued and screwed to the inside faces to create rabbets for the case bottom and back (details 'a' and 'c').

The sides have handholds to make storing and moving the cart around much easier. They're formed using the same process as the assembly cart. (Refer to page 65 for the details.)

The back of the cart is shorter than the sides to provide a resting point for the back edge of the flip top. The case back also has a support piece added to it, as shown in detail 'b.' Together with the side supports, they create a lip to install a fixed shelf later on.

A pair of solid-wood cleats on the bottom of the cart should look familiar,

► When it's time to store this benchtop tool cart out of the way, the top flips over (inset) and locks for a lower profile.

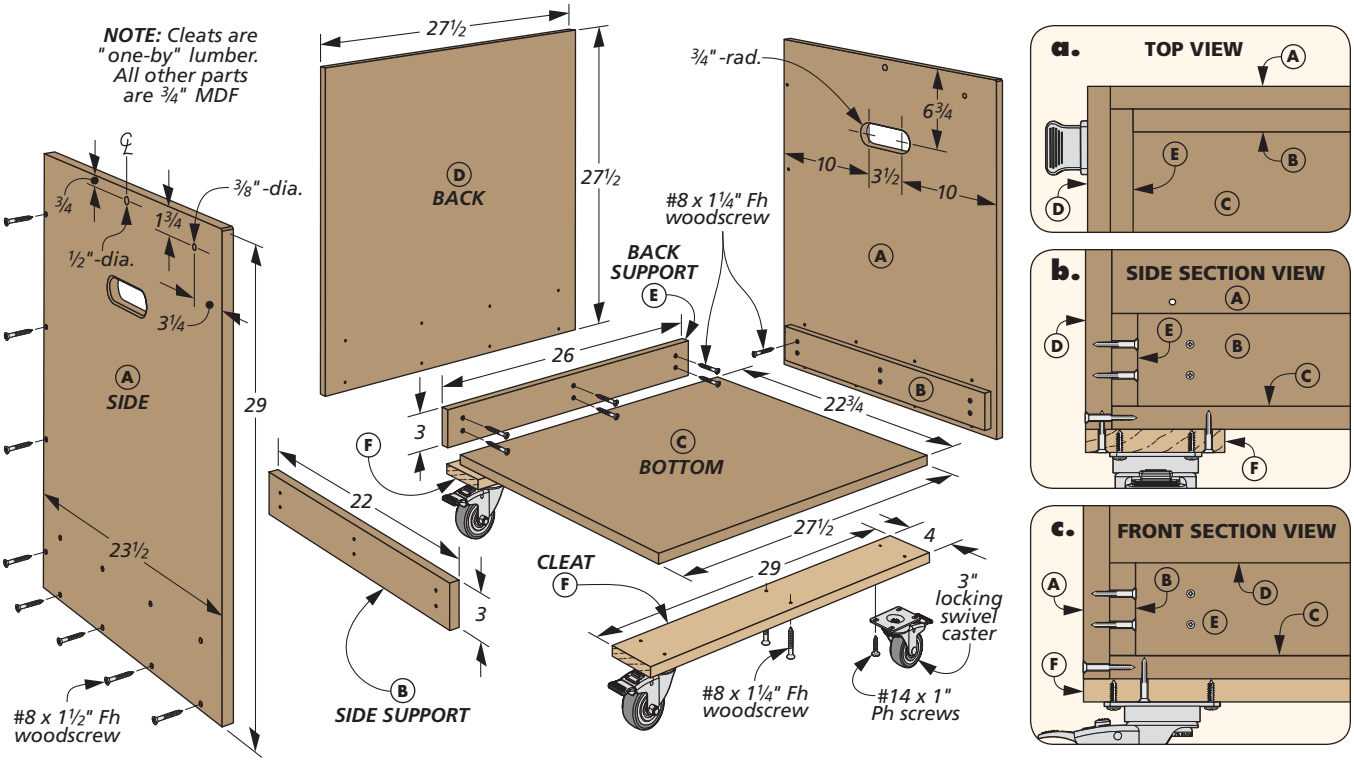

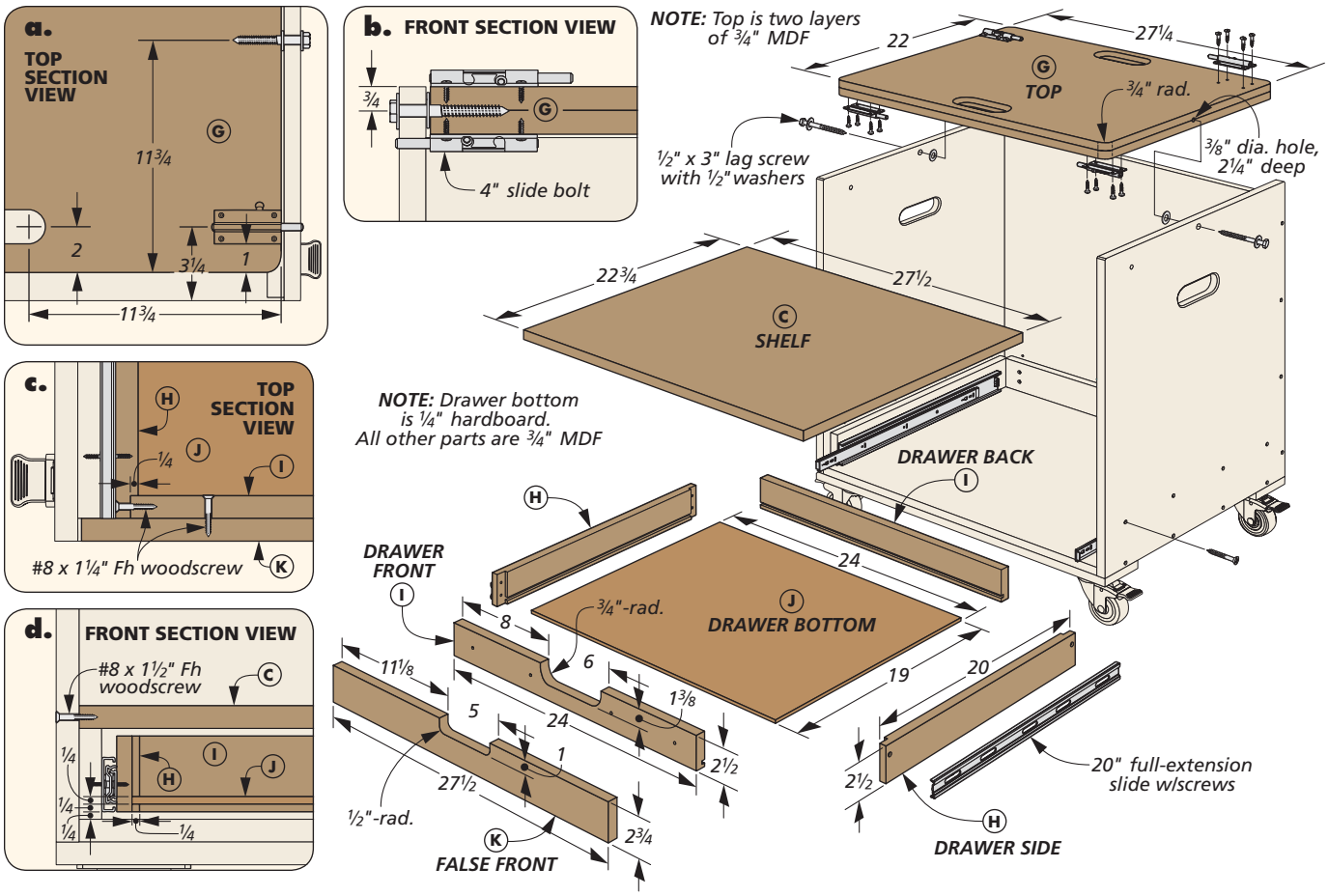

as well. Casters attached to them round out the main part of the cart's case.

HEAVY-DUTY TOP

The top of the cart is glued up from two layers of MDF for increased stiffness. I sized it to fit between the sides of the cart with a ⅛" gap on either side. It has a handhold cut at the front and back to aid in rotating the top.

The top rotates on a pair of lag screws. So you need to drill a pilot hole on each edge of the top (details 'a' and 'b' above). Clearance holes in the cart sides are located so the top is flush with the sides.

SLIDE BOLTS. In order to secure the top in either orientation, a pair of slide bolts engages holes drilled through the sides of the cart. I attached the slide bolts on each face of the top, as you can see in details 'a' and 'b.' Then I used the slide bolts to locate the holes in the sides.

Before installing the top, I mixed up some epoxy and placed it in the pilot holes of the top. Then I drove in the lags. Note that there are washers under the head of the lag screws and between the case side and flip top, as in details 'a' and 'b.'

DRAWER & SHELF. With a planer in the stowed position, there isn't much storage space in the cart. Even so, I did manage to squeeze in a shallow drawer. It's constructed similarly to the drawers in the assembly cart (details 'c' and 'd'). A cutout in the drawer front creates clearance for the handhold in the false front. After installing the drawer slides, you can cap off the drawer compartment by adding the shelf, as in detail 'd.'

Materials, Supplies & Cutting Diagram (for the flip-top tool cart)

A	Sides (2)	¾ MDF - 23½ x 29
B	Side Supports (2)	¾ MDF - 3 x 22
C	Bottom/Shelf (2)	¾ MDF x 22¾ x 27½
D	Back (1)	¾ MDF - 27½ x 27½
E	Back Support (1)	¾ MDF - 3 x 26
F	Cleats (2)	¾ - 4 x 29
G	Top (1)	1½ MDF - 22 x 27¼
H	Drawer Sides (2)	¾ MDF - 2½ x 20
I	Dwr. Front/Back (2)	¾ MDF - 2½ x 24
J	Dwr. Bottom (1)	¼ Hdbd. x 19 - 24
K	False Front (1)	¾ MDF x 2¾ - 27¼

- (28) #8 x 1½" Fh Woodscrews
- (38) #8 x 1¼" Fh Woodscrews
- (4) 3" Locking Swivel Casters
- (16) #14 x 1" Ph Sheet Metal Screws
- (1 pr.) 20" Full-Extension Slides w/Screws
- (2) ½" x 3" Lag Screws
- (4) ½" Washers
- (4) 4" Slide Bolts w/Screws

1x6 - 60" Fir

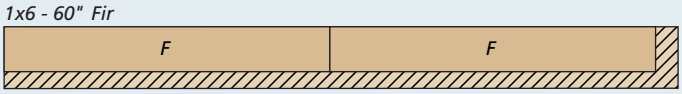

ALSO NEEDED:
One 24" x 24" sheet of ¼" hardboard
One 49" x 48½" sheet of ¾" MDF
One 49" x 97" sheet of ¾" MDF

Now for the ROUTER TABLE

The third and final cart is probably the one that you'll use most — the router table. The large surface makes it capable enough for workpieces of any size. An open shelf and a drawer below give the cart plenty of storage space. In effect, this turns the cart into a rolling router center big enough for all of your gear.

While storage is valuable, it's the top that matters in a router table. And this one hits all the right notes. It has a smooth, durable plastic laminate surface. The top is extra thick to absorb vibration and stay flat over the long haul. And the router is mounted to an aluminum insert plate for easy router adjustments and bit changes. The plate comes with a set of insert rings that allow you to match the opening in the plate to the size of the router bit. Finally, a simple, sturdy hardwood fence handles the job of guiding a workpiece past the bit.

► The router table cart features a large working top and plenty of storage below.

FAMILIAR CONSTRUCTION. By now, you'll have figured out there aren't any surprises in building the cart case, as shown in the drawing below. In fact, the basic structure makes it a near twin to the flip-top cart on the previous page. The main difference is the size of the side supports. These are taller, which means the drawer they surround can be deeper to hold all your bits and accessories. Don't worry, there's still plenty of space above the drawer to accommodate even the largest routers.

The side assemblies are joined to the bottom with glue and screws, as you can see in detail 'a.' The back and its support piece are added to round out the case construction, as illustrated in the drawing at left and detail 'b.'

After attaching the wood cleats to the bottom and screwing the casters in place, you can tip the cart upright. Flip the lever on the casters to keep it stable, and you're ready to start making the top.

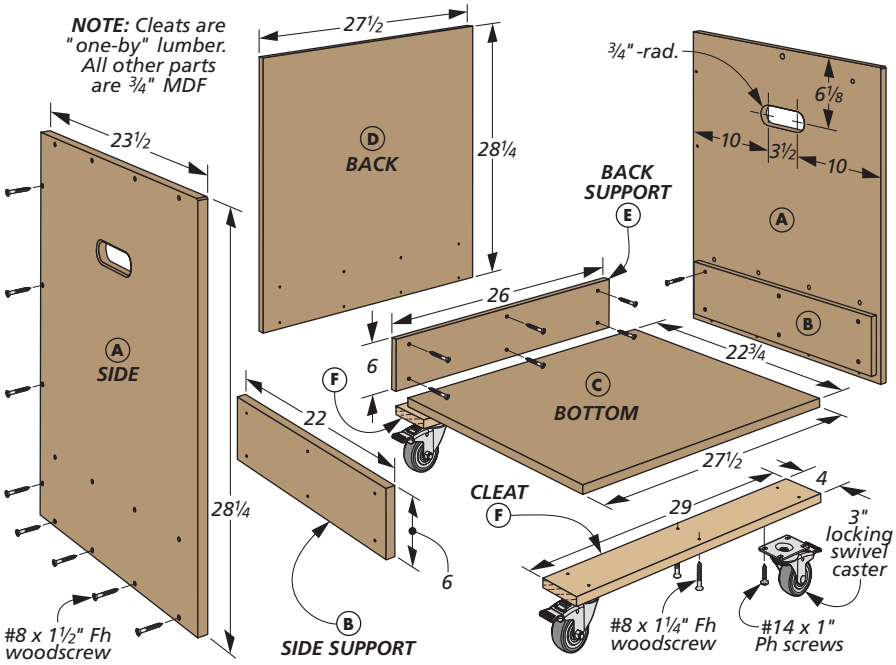

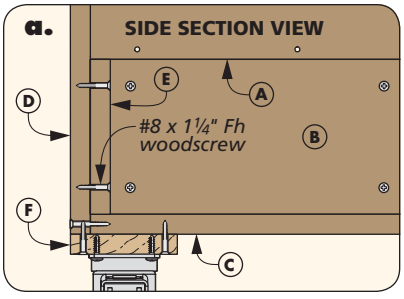

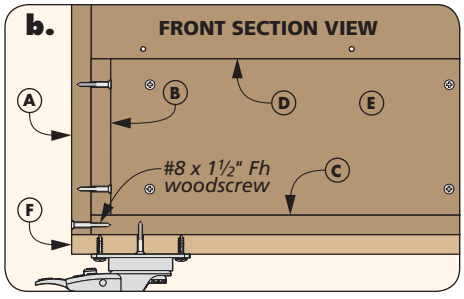

HIGH-PERFORMANCE TOP

Even though the top on the router table needs to be fixed solidly in place, it does share one feature with the flip-top cart. The top consists of two layers of MDF glued together, as you can see in the drawing on the top of the next page.

CAREFUL SIZING. As the drawing indicates, the two layers aren't the same size. The top spans the full width of the cart, while the subtop nestles down between the side and back. So it's important that the length and width of the subtop match the opening in the cart.

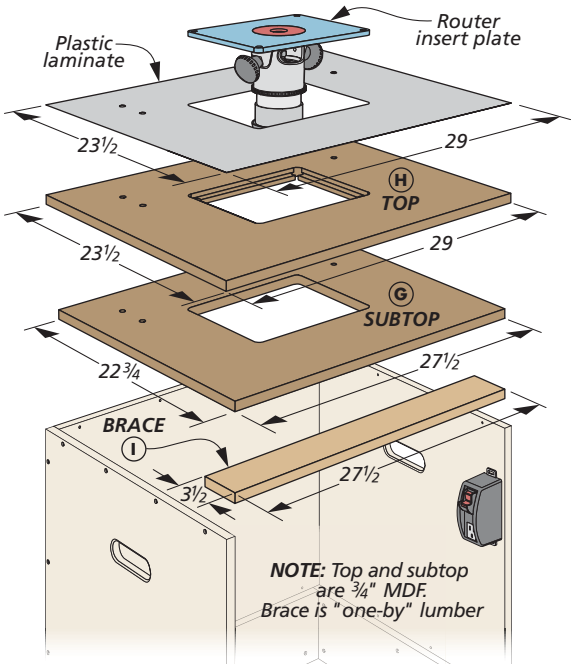

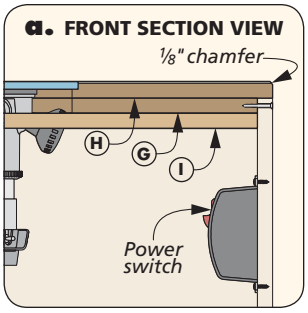

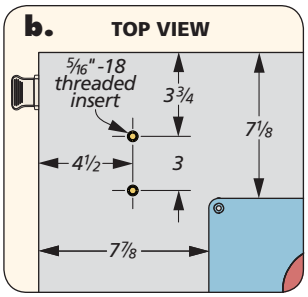

How-To: INSERT PLATE

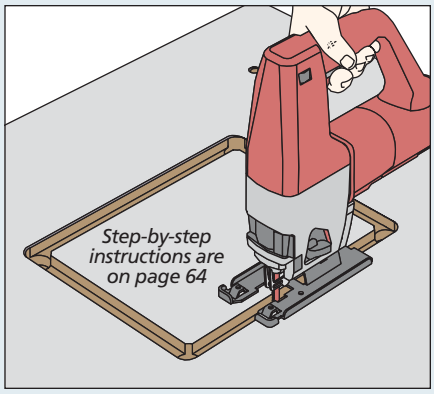

Insert Plate Opening. A router and a jig saw combine to create a perfect-fitting opening for an insert plate.

At the table saw, I trimmed the panel to size in a series of cuts until the subtop just fits into the cart without forcing the sides apart or leaving a gap. Then it can be glued and screwed in place.

The top is cut to match the overall width and depth of the cart and installed with glue and screws. On the bottom face of the subtop, I added a wide, solid-wood brace along the front edge to provide additional stiffness (detail 'a').

PLASTIC LAMINATE WORKSURFACE. A router table sees a lot of use in most shops. So the worksurface needs to stand up to the wear and tear of workpieces sliding across it. To give the top durability and a smooth surface, I added plastic laminate. Cut a piece of laminate that's at least 1" larger in each dimension than the top of the cart.

I like to use spray contact adhesive to attach plastic laminate to a surface. Spray a coat on both the top and the laminate. Once the adhesive is dry to the touch, you can place the laminate. A flush-trim bit in your router easily removes the excess laminate. Then switch to a chamfer bit to ease the outside edges and prevent chipping.

SOME ADDITIONS. The top is now ready for the insert plate. The box above shows one part of the process. For the complete story, turn to page 64.

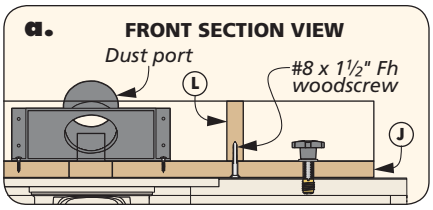

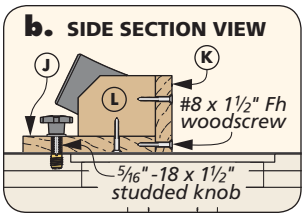

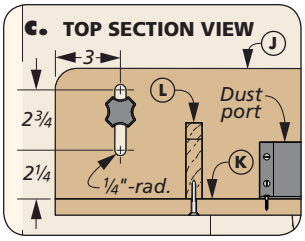

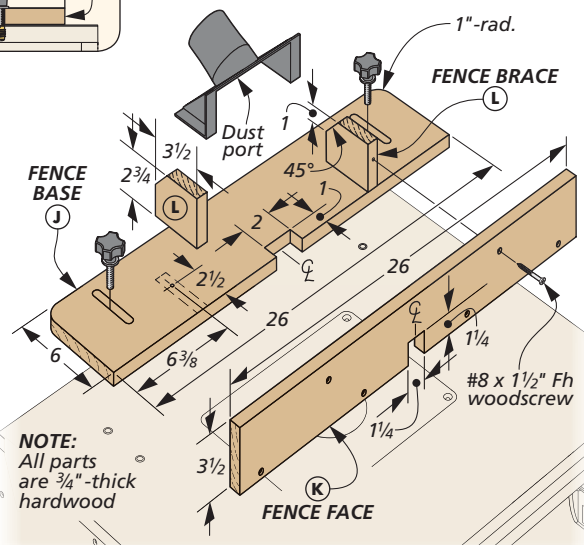

The fence is secured to the top with a series of threaded inserts. The locations for these are found in detail 'b' above.

POWER SWITCH. One other addition has to do with increasing the safety and convenience of using a router in a table. You may want to consider attaching a power switch to the inside of the case near the front, as shown in the drawing above. This switch makes turning off the router much easier. You can find the source for the one I used on page 67.

THE FENCE. I find that an uncomplicated router table fence is simpler to make and works just as well as a full-featured fence. You can see how this plays out in the drawings at left.

The overall structure is an L-shaped hardwood assembly backed up by a pair of braces. The base of the fence has a centered bit notch and a slot at each end used for attaching the fence to the top, as in detail 'c.' I also rounded the back corners with a radius.

The fence face also has a bit notch cut into it. The face and base are glued and screwed together, as illustrated in detail 'b.' As I mentioned, adding two braces ensures the fence stays square during use, as you can see in details 'a' and 'b.' The back corners of the braces are beveled to soften the edge.

The final part of the fence to attach is a commercial dust port. All that's left on the router table is to build a drawer. You can find the details on the next page.

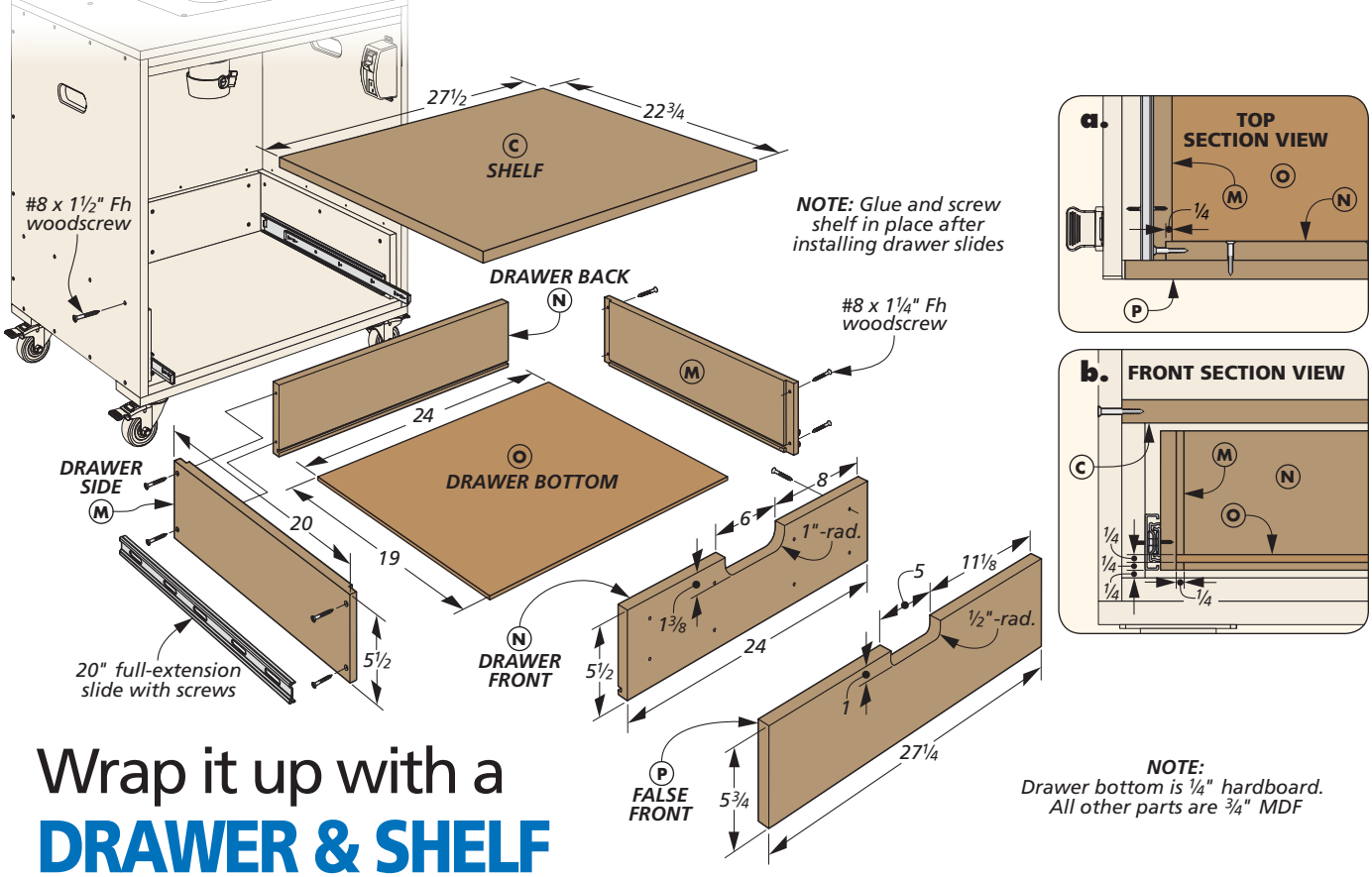

NOTE: Drawer bottom is ¼" hardboard. All other parts are ¾" MDF

Wrap it up with a DRAWER & SHELF

Having a router or two in your shop means there's no shortage of bits, wrenches, collets, and more to keep track of. The drawer in the cart is a handy place to corral all those items. A quick construction process means you can finish off this router table and have it ready for action in a short time.

RABBETS & GROOVES. One of the features I like about the drawers in these carts is the rabbet joinery, as shown in detail 'a.' It's straightforward to cut, and it helps to register the parts for assembly.

The cutout in the drawer front is an easily overlooked detail. But it's important, as the handhold in the false front won't do you any good without it. After cutting a groove in all the drawer box parts to house the hardboard drawer bottom, you can glue up the box (detail 'b').

The drawer slides can now be installed on the drawer box and in the cart. Here again, a look at detail 'b' shows you what you need to know.

FALSE FRONT & SHELF. The false front gives the drawer a finished look and includes the integral handhold that matches the sides. Finally, you can slip the shelf into place to wrap up this cart.

While the carts are complete, the next page has one other bonus add-on to the one-wall workshop. A set of sliding tool platforms to make the best use of space.

Materials, Supplies & Cutting Diagram (for the router table cart)

A	Sides (2)	¾ MDF - 23½ x 28¼
B	Side Supports (2)	¾ MDF - 6 x 22
C	Bottom/Shelf (2)	¾ MDF x 22¾ x 27½
D	Back (1)	¾ MDF - 27½ x 28¼
E	Back Support (1)	¾ MDF - 6 x 26
F	Cleats (2)	¾ - 4 x 29
G	Subtop (1)	¾ MDF - 22 x 27¼
H	Top (1)	¾ MDF - 23½ x 29
I	Brace (1)	¾ - 3½ x 27½
J	Fence Base (1)	¾ - 6 x 26
K	Fence Face (1)	¾ x 3½ - 26
L	Fence Braces (2)	¾ x 2¾ - 3½
M	Drawer Sides (2)	¾ MDF - 5½ x 20
N	Dwr. Front/Back (2)	¾ MDF - 5½ x 24
O	Dwr. Bottom (1)	¼ Hdbd. x 19 - 24
P	False Front (1)	¾ MDF x 5¾ - 27¼

- (44) #8 x 1½" Fh Woodscrews
- (46) #8 x 1¼" Fh Woodscrews
- (4) 3" Locking Swivel Casters
- (16) #14 x 1" Ph Sheet Metal Screws
- (1) 26" x 32" Plastic Laminate
- (1) Router Table Insert Plate
- (4) 5/16"-18 Threaded Inserts
- (2) 5/16"-18 x 1½" Studded Knobs
- (2) 5/16" Washers
- (1) Dust Port
- (1) Power Switch
- (1 pr.) 20" Full-Extension Slides w/Screws

¾"x 6½" - 60" Hard Maple (2.7 Bd. Ft.)

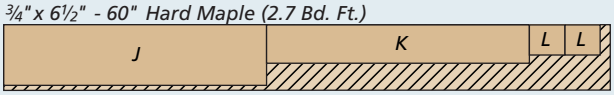

1x6 - 96" Fir

ALSO NEEDED:
One 24" x 24" sheet of ¼" hardboard
One 49" x 48½" sheet of ¾" MDF
One 49" x 97" sheet of ¾" MDF

Add some cool **TOOL SLIDERS**

The carts make configuring and using, your shop space a snap. However, there are other power tools that could use a little organization, too. Benchtop power tools are compact space-savers that pack a lot of punch. The problem is that unless they have a "home," these tools can end up in the way, contributing to unnecessary shop clutter.

The solution to this problem is a set of simple sliding platforms. They're designed for the miter saw workstation shown in the previous issue. They work on a simple concept. Each tool is secured to an MDF base. In the stored position, the tools sit back against the wall and leave free space for work or to cut long boards at the miter saw.

When you want to use the tool, you just pull the base forward. A studded knob and threaded insert engage a hole drilled in the front edge of the workstation, as shown in the photo above. This prevents the tool from moving around during use. Wood guides keep the bases aligned and on track.

▲ Benchtop tools stay close at hand on these pull-out sliders. Lock them in place at the front of the workstation, or slide them back to free up space.

NO NONSENSE DESIGN. The drawing below shows the construction of the three sliders I made. Keep in mind that you may need to modify the size of the bases to suit the tools you plan to use. An important part of that is to make sure the sliders sit behind the fence of your miter saw when they're pushed back against the wall.

There are a few other details that I want to highlight about the sliders. I added a pair of wood handles to the front edge of each base to create a solid place to pull the slider out and push it back in.

The rabbet in the guide is just a hair deeper than the thickness of the bases, so that it doesn't bind, as in detail 'a.' Also note that the outer guides only have a rabbet cut on the inside edge. Speaking of binding, I waxed the bottom of the bases so that they slide smoothly even with a relatively heavy tool on top. Then you can attach your tools to each base.

I've found that a workshop needs to be flexible to suit the task at hand. And this one-wall workshop and its carts offer a great way to get the job done. W

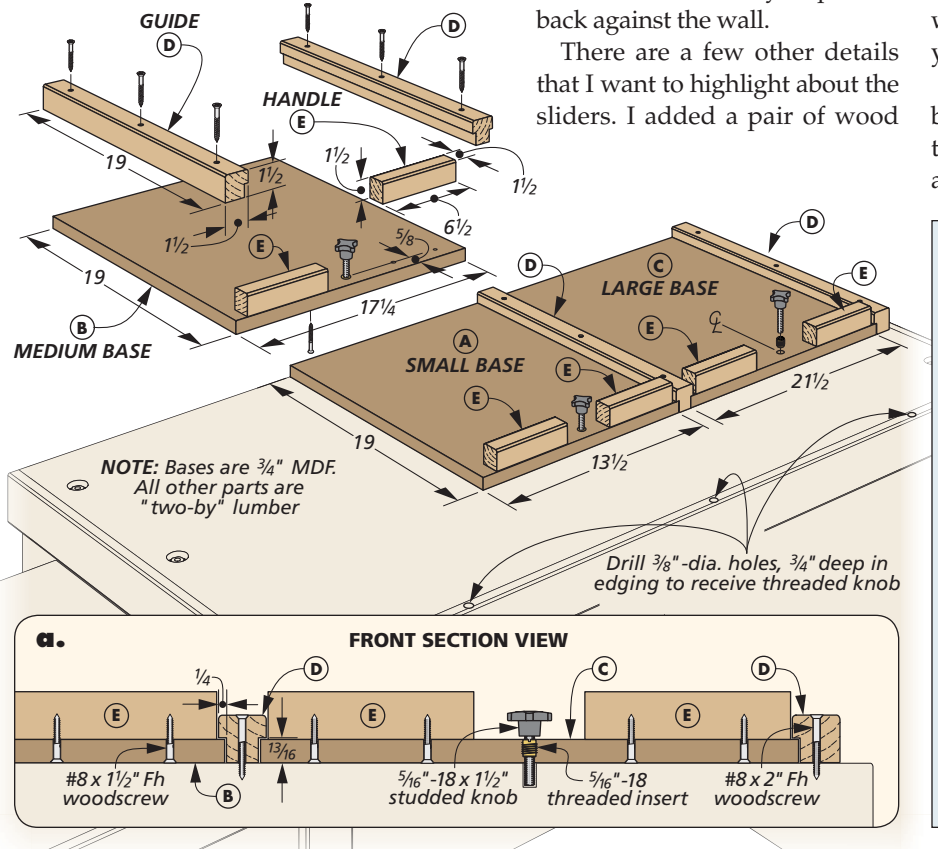

Materials, Supplies & Cutting Diagram (for the tool sliders)

A	Small Base (1)	¾ MDF - 13½ x 19
B	Medium Base (1)	¾ MDF - 17¼ x 19
C	Large Base (1)	¾ MDF - 21½ x 19
D	Guides (4)	1½ x 1½ - 19
E	Handles (1)	1½ x 1½ - 40 rgh.

- (12) #8 x 1½" Fh Woodscrews
- (12) #8 x 2" Fh Woodscrews
- (3) 5/16"-18 x 1½" Studded Knobs
- (3) 5/16"-18 Threaded Inserts

2 x 4 - 48" Fir (Two Boards)

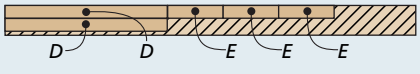

ALSO NEEDED:
One 49" x 48½" sheet of ¾" MDF

Designer Project

Box-Jointed Craft Center

This unique storage project holds ample craft supplies in its five stacked trays. When it's time to work, the trays cantilever out for easy access.

More storage is always handy, particularly for crafts that involve a lot of small parts and pieces. That's why I built this handy craft center. In storage and transport mode, it's a compact package that's easy to carry around by its comfortable handle. And when you're ready to work, the four ample upper trays swing out above the large lower tray to put all the contents within easy reach. An optional stand raises it to a comfortable working height when you're sitting in a chair. (Refer to page 41 for more on this design option.)

SIMPLE, STURDY CONSTRUCTION. I opted to use box joints to hold the five trays together, as well as the handle. This joinery gives the cherry trays a great look while also providing a rock-solid connection between the parts. The same technique is used to join the parts of the handle before performing a little work at the band saw to complete the final shaping.

CANTILEVER ACTION. But the most interesting feature of this craft center is how the upper trays pivot out above the lower tray. As it turns out, this wasn't really difficult to do. The secret is a series of solid-wood pivot bars joined to the trays with brass binding posts. I'll show you the tips and tricks for installing them on page 38.

Construction Overview / *OVERALL DIMENSIONS: 20"W x 13¾"H x 10⅞"D*

▲ Like the trays, the parts of the solid-wood handle are connected with box joints. Some shaping at the band saw creates the curves.

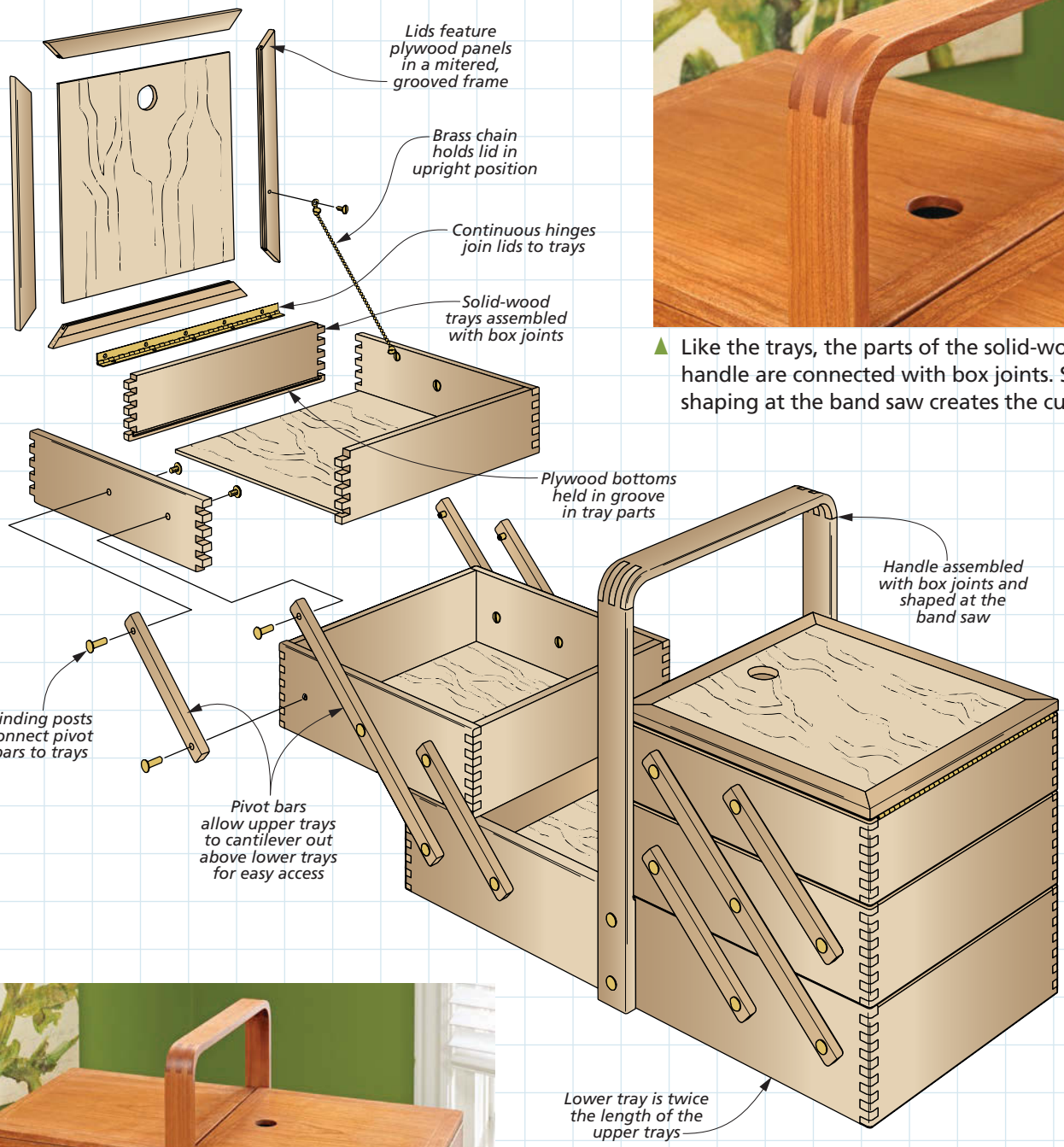

NOTE: *Refer to page 67 for hardware sources and finishing information*

◄ When closed up, the center is a compact, easy-to-transport package that securely stores all your craft and hobby supplies.

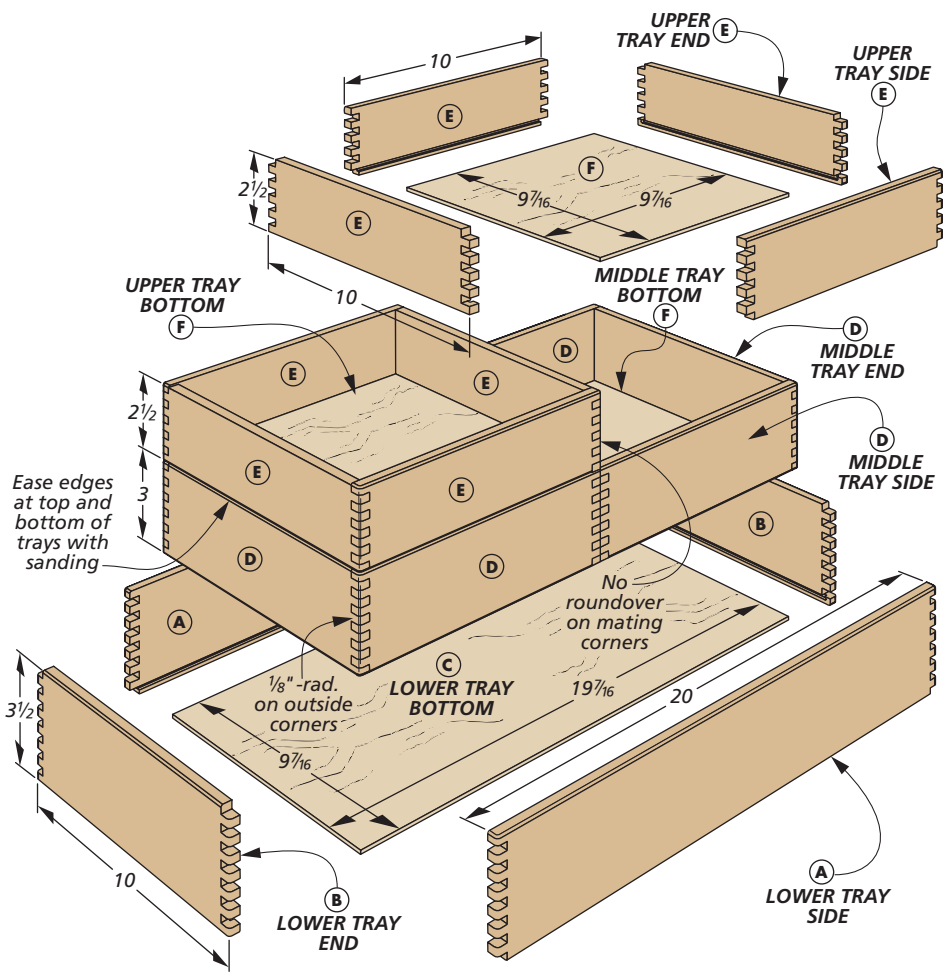

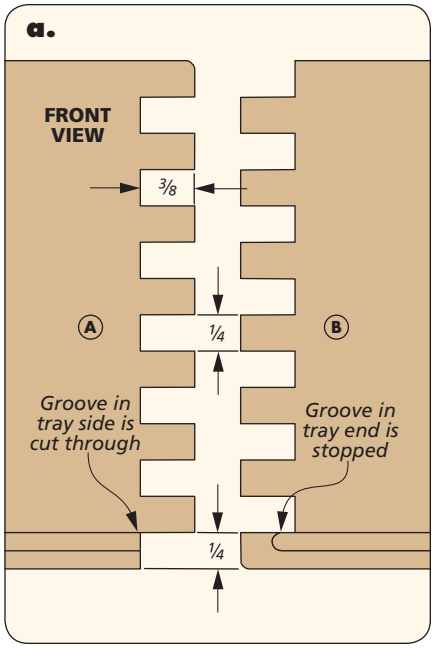

NOTE: *Tray sides and ends are ⅜"-thick hardwood. Tray bottoms are ⅛" plywood*

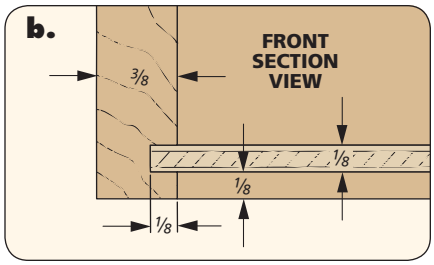

Box joints for the **TRAYS**

Construction of the craft center starts with the five trays. As you can see above, the trays are made from solid cherry. They feature plywood bottoms and are assembled with box joints.

The rectangular lower tray is twice the length of the two pairs of trays above it. It's also the deepest tray at 3½". The pair of middle trays are ½" shallower than the lower tray, and the upper trays are ½" shallower yet (3" in the middle, 2½" at the top). Since I used ¼" box joints to join the tray ends and sides, this equaled out to one more pin and slot in each set of tray parts as you work your way from the top of the craft center to the bottom.

PREPARE TRAY PARTS. The stock for the tray ends and sides is ⅜" thick, so you'll want to start with ½"-thick hardwood and joint and plane it to final thickness. Also, prepare some extra stock for test-cutting your box joints. I always like to cut box joints in some sample pieces until I get the settings just right.

Once all your stock is the proper thickness, you can trim the parts to final length. As for the width, it's a good idea to leave the pieces a hair wider than what is shown above. The reason for this is that it's difficult to get a pin or slot of exact width on the edge of your workpieces as you cut the joints. Having a little extra width allows you to trim the parts for a full pin or slot after cutting the box joints, as shown in Figure 5 on the next page.

BOX JOINT BASICS. Once your tray parts (and test pieces) are cut to length and a hair wide, you're just about ready to start making box joints. But first, you'll need a simple table saw jig. You'll find the details for the one I built on page 65. As you can see in the drawings on the following page, it has a fence and base that attach to the miter gauge for supporting the workpiece and a hardwood key spaced ¼" from the dado blade.

The sequence shown in the drawings on the following page should give you the basics of cutting all the box joints. As mentioned earlier, I like to start with some test pieces until I get the fit right. Then I'll label my pieces, so I can keep track of them as I cut. To do this, I'll mark what tray they are part of, and also write a corresponding number in the mating corners of the workpieces. Label the mating corner ends with a 1, 1, and then the next corner ends with 2, 2, etc. This way, you can cut the parts in sequence. And when you switch from cutting box joints on one workpiece to the next, all you have to do is match up the numbers to make sure you get it right.

CUTTING BOX JOINTS. With all the necessary prep work done, the process of cutting box joints is pretty straightforward. Figures 1 through 4 in the box below provide the details. Just make sure you hold the pieces firm and steady as you cut, so you don't end up with a misaligned slot or pin. As discussed previously, you'll cut slots across the full width of the workpieces, and then trim them to final width to end up with a full pin or slot when you're done (Figure 5).

COMPLETE THE TRAYS. The last step for the trays is cutting a groove and adding the plywood bottoms. As you can see in Figure 6 below, I routed stopped grooves in the tray ends, so that I wouldn't create small holes in the outside faces of my trays. On the tray sides, the groove ends in a slot, so you can just rout it as you normally would without making a stopped cut.

With all the glue surface available with box joints, you don't need much glue to create strong joints. I like to apply a little to the inside of the slots before gluing and clamping up the parts. All that's left is a little routing and sanding to round some of the box corners and edges, as in the main drawing on the previous page.

How-To: CUT BOX JOINTS & COMPLETE THE TRAYS

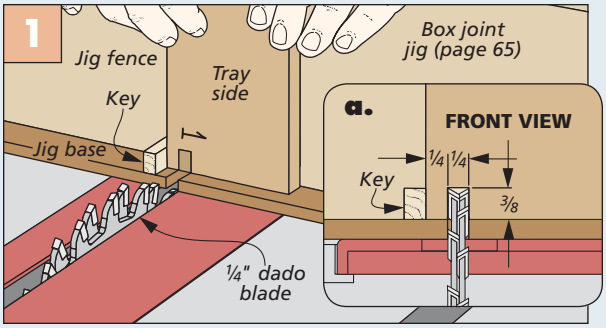

Cut the First Slot. For the first cut, maintain a firm grip to keep the workpiece in position against the fence and tight against the key.

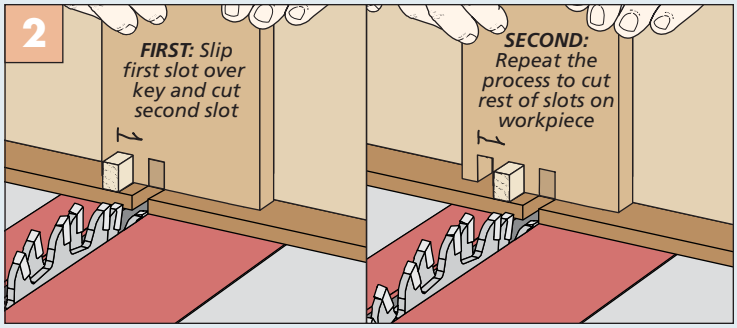

Cut Adjacent Slots. After cutting each slot, slip the slot over the key to cut the next one. As you move the workpiece after cutting each slot, make sure the bottom edge stays flat against the base.

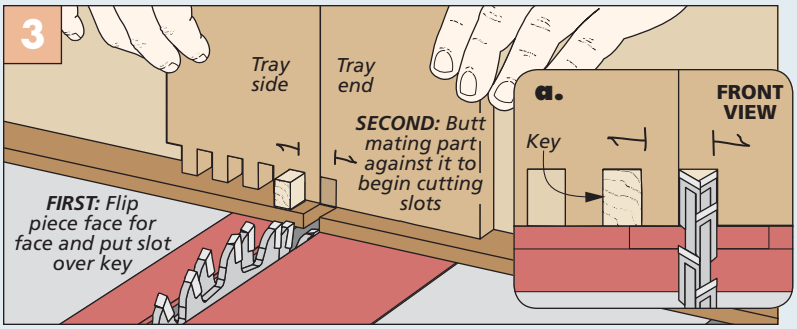

Switch to Mating Workpiece. Flip the first workpiece around (face for face), and use it as a spacer for cutting the first notch in the mating workpiece. Butt the mating piece firmly against the first one while cutting.

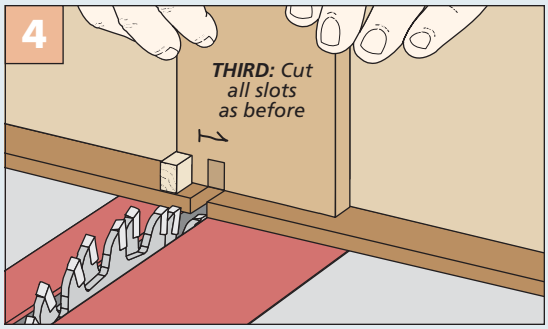

Repeat the Process. Now cut along the mating workpiece as before, slipping the slot over the key in order to cut the adjacent slot.

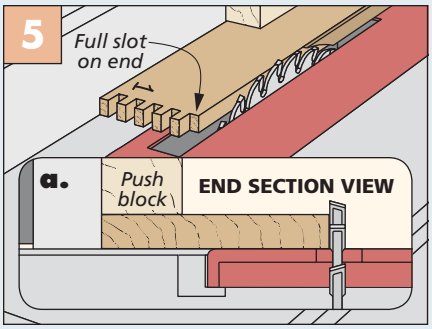

Final Width. After cutting all the box joints, rip the waste edge off each piece so there's a full pin or slot remaining.

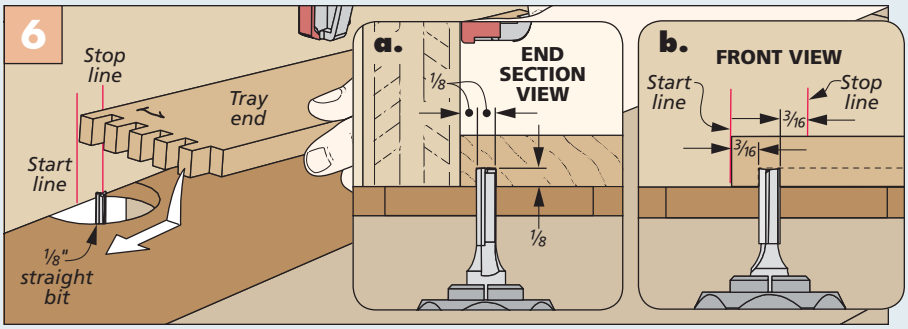

Stopped Grooves. The tray parts have a groove to accept the plywood bottom. This groove can be cut all the way through the tray sides, but it needs to be a stopped cut on the tray ends. You can make the stopped groove as shown above.

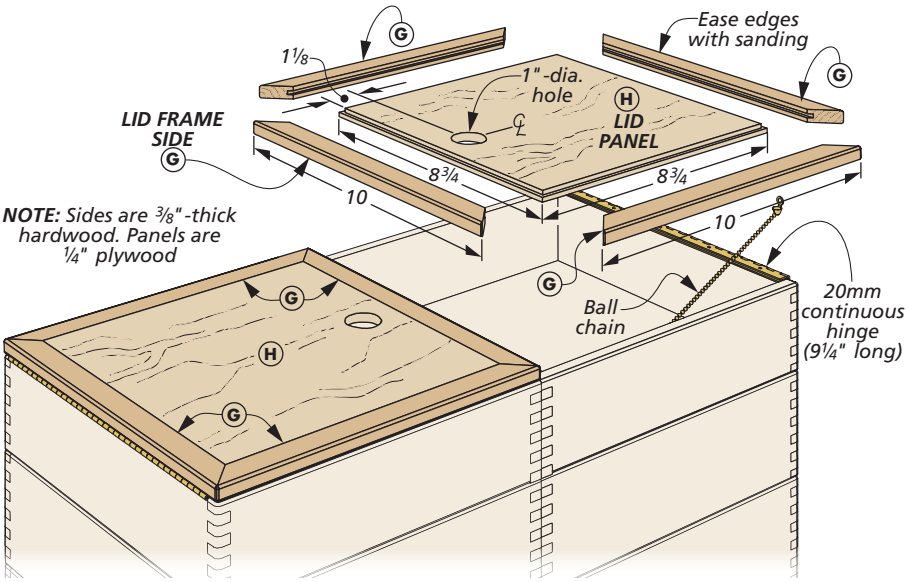

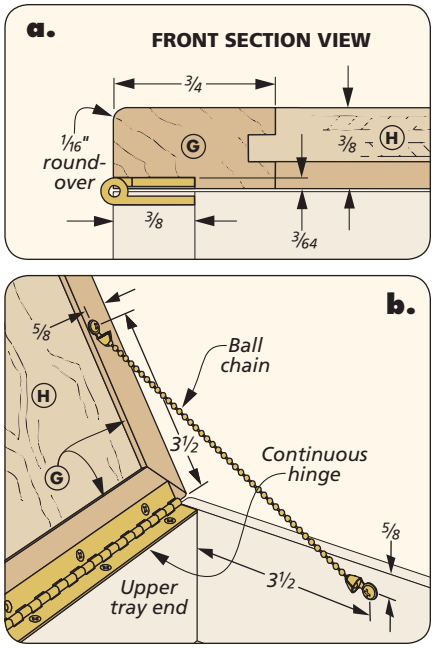

Lids & PIVOT BARS

Now that all five trays are complete, you can get started on the lids that enclose the upper trays. Each is a mitered hardwood frame sized to fit flush with the tray, with a plywood panel in the middle. A hole in each panel allows you to open the lid. They're joined to the upper trays with continuous hinges and brass chains.

START WITH THE LID FRAMES. Like the tray parts, the lid frame sides are made from ⅜"-thick hardwood. So you'll want to get started by jointing and planing the stock to size from ½"-thick material. Then rip the lid frame sides to final width, but leave them long for now.

MITERS. The overall dimensions of the lid frame need to match those of the upper tray, which can be easier said than done. I found it was best to "sneak up" on the miters, and check the fit of each frame on the tray until I got it right.

GROOVE. Now you can cut the grooves in the frame sides, as shown in Figure 1 below. Set the rip fence so that the panel will align flush with the top edge of the of the frame once it gets added next.

PANEL. Now turn your attention to the plywood panel that forms the center portion of each lid. As you can see above, it's rabbeted to fit the groove in the frame sides. The rabbet is formed as shown in Figure 2 below. Check the fit of the panel until it slips nicely into place in the grooves. Finally, drill the hole in the lid panel with a Forstner bit. Then it's time to assemble the lids using glue and clamps.

HINGE MORTISES. Both the top tray and the lid have shallow mortises in them

How-To: CREATE THE LIDS

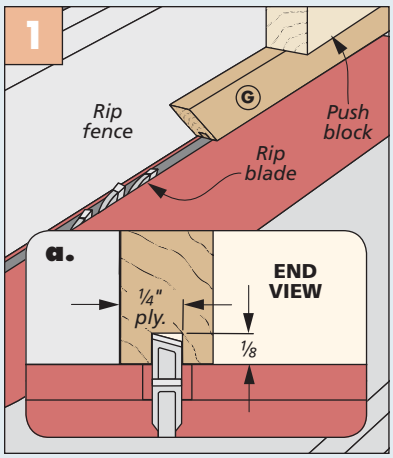

Grooves. After mitering the frame sides, cut grooves with a standard rip blade to accept the plywood panel.

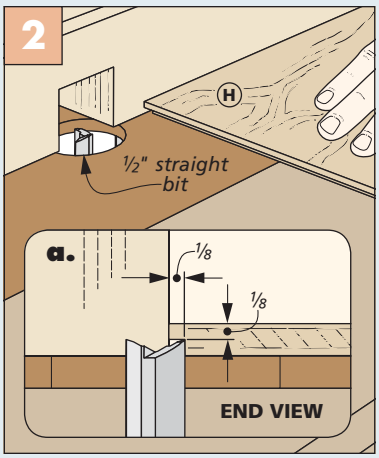

Rabbet. Cut a small rabbet around the edges of the lid panel so it fits the grooves in the mitered frame.

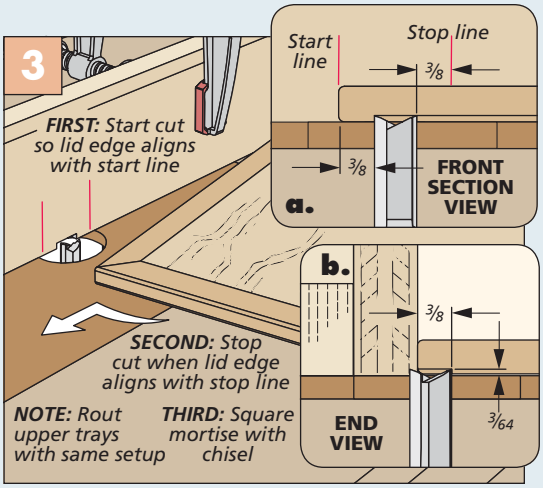

Hinge Mortise. The hinge mortises on the lid and upper tray both require simple stopped cuts on the router table as shown.

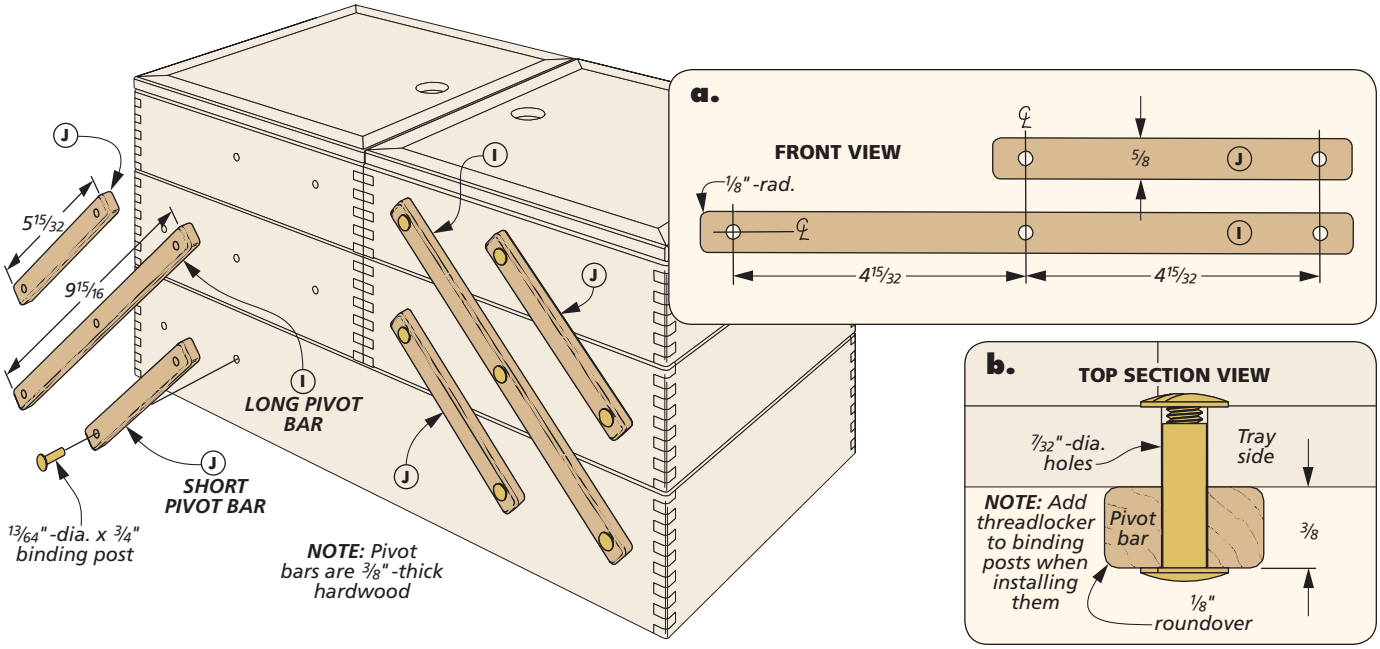

for the continuous hinges. These are easy to cut with the same router table setup, as shown in Figure 3 on the previous page. Leave the lids off for now, however, as they'll get in the way during the next step, which is making and installing the pivot bars.

PIVOT BARS. The craft center's cantilever action is accomplished with a series of pivot bars. There are eight short pivot bars and four long pivot bars. They're joined to the sides of the trays with binding posts. These are two-part fasteners that consist of a small bolt that threads into a barrel (detail 'b' above).

After sizing the bars, the first order of business is drilling the holes in the bars. It's important that the holes align perfectly from each bar to the next, so use a stop block on the drill press for each hole setting. With the holes drilled, soften the edges of the bars with sandpaper.

For the swing-out trays to work smoothly, the bars must be parallel with each other, and their holes must align horizontally and vertically. I used the process shown below to accomplish this. The key is laying out and drilling the holes in the middle tray first, as shown in Figure 1 below. After that, use the binding posts to secure the bars in the middle tray, then stack and clamp all five trays together. Finally, use spacers to align the bars at the correct position on the lower and upper trays (Figure 2).

After marking all the hole locations, you can drill them out and connect the trays with more binding posts. (I added a few drops of threadlocker to each post as I installed it.) The trays should now open and close smoothly.

LIDS. All that's left is attaching the lids to the upper trays with the hinges and brass chains. Refer to the drawings on the previous page for details.

How-To: INSTALL THE PIVOT BARS

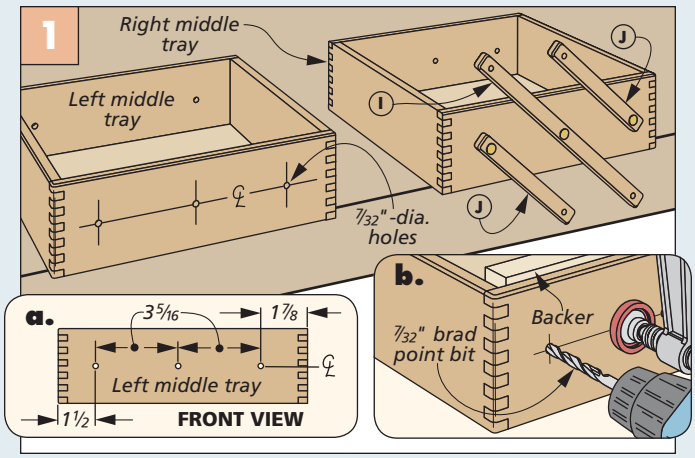

Middle Tray Holes. The middle trays hold the key to ensuring that the pivot bars work properly. Carefully lay out and drill the holes in these trays, using a backer to prevent blowout.

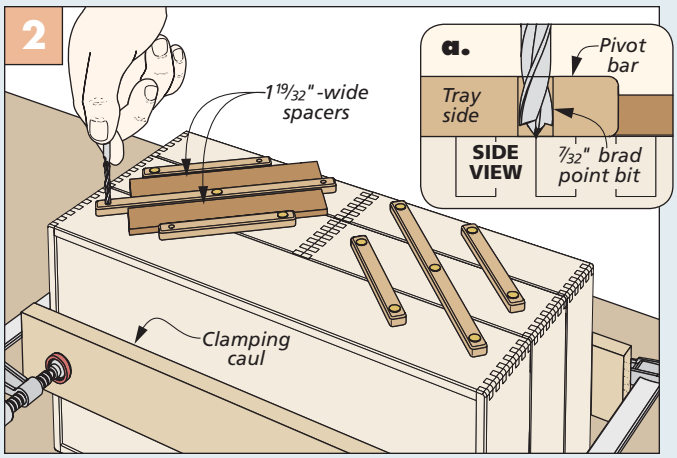

Install Pivot Bars. After attaching the bars to the middle tray, stack and clamp the trays, and use spacers to position the bars as shown. Then mark and drill the holes.

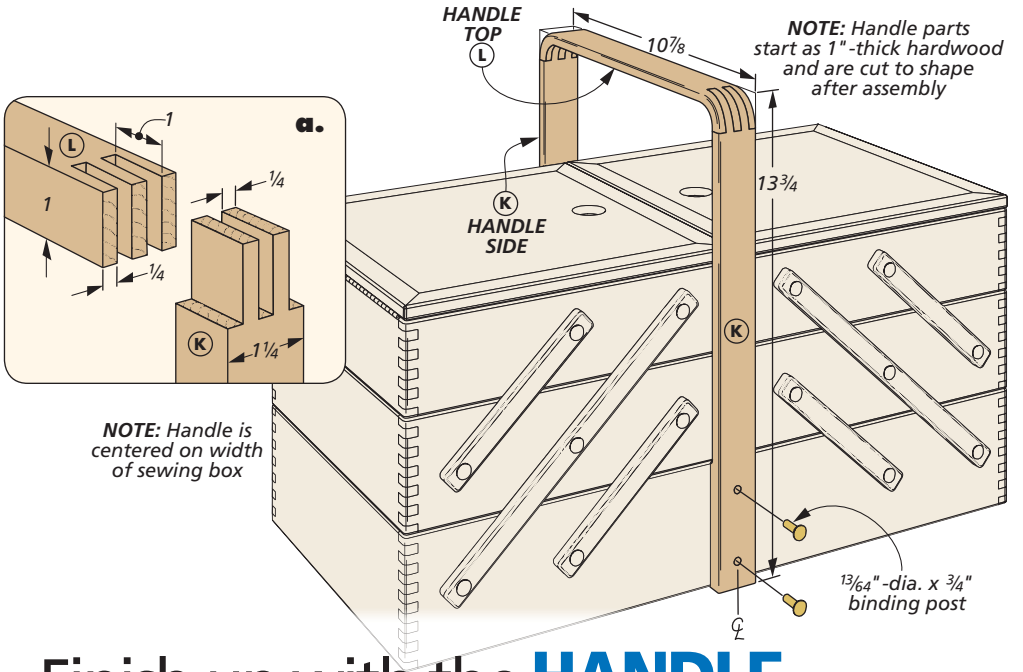

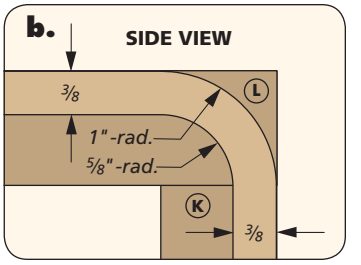

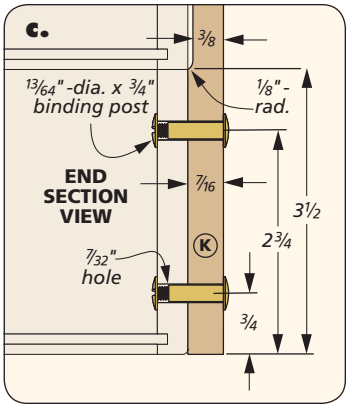

Finish up with the **HANDLE**

Your box-jointed craft center is nearing completion. All that's left in the construction process is adding the handle and, if desired, some tray dividers and a stand (refer to the "Designer's Notebook" on the following page). To give it a unique look that matches the rest of the box, I made the handle from cherry parts connected with box joints. Then I formed the final curved shape of the handle.

HANDLE. Since the handle is made from thicker parts than the rest of the sewing box, it requires purchasing one thick cherry board. This thickness is what allows you to create the unique curved box joints at the top of the handle, as shown in the drawing above. But first, you'll start by cutting the 1"-thick pieces to width and length. Here again, leave the parts a hair wider than their finished width.

BOX JOINTS. The process for cutting these box joints is about the same as outlined on page 37. The main difference is that these parts are thicker, which means the cuts for the box joints need to be deeper, as shown in detail 'a' above. But other than that, the method for cutting them is identical. You can even use the same jig (Figure 1 below provides the details).

SHAPING THE HANDLE. After cutting the box joints and gluing the handle together, the work of shaping it can begin. I relied on a few different tools to get good results when forming the handle.

As indicated in detail 'c' above, the finished handle is slightly relieved on the inside faces to provide clearance when opening and closing the trays. To form a smooth transition at this point where the thickness changes, I drilled holes at the drill press as shown on the left side of Figure 2. While there, I also drilled out the inside radius at each upper corner with a 1¼" Forstner bit (detail 'b'). Then I

How-To: MAKE THE HANDLE

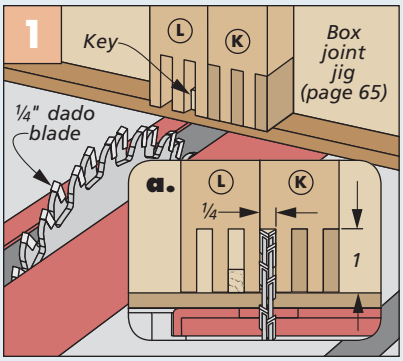

Box Joints. The box joints for the handle are cut the same way, with the same jig, as the tray parts, only deeper.

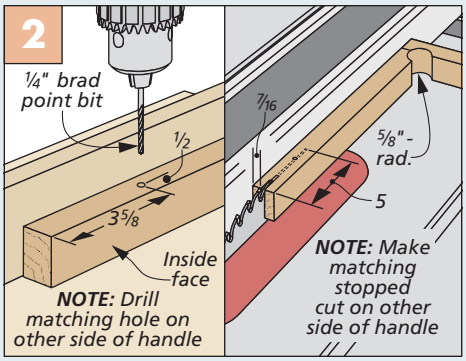

Shaping. Drill holes near the bottom and top of the handle to form clean radii, then make stopped table saw cuts at the bottom.

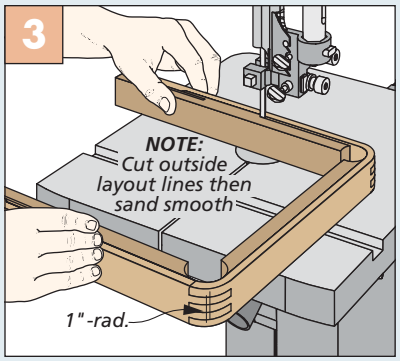

Band Saw. The remainder of the shaping work on the handle is done at the band saw and with sanding.

made some stopped cuts at the table saw to form the bottom of the handle (right side of Figure 2, previous page).

TO THE BAND SAW. All that's left is shaping the upper portion of the handle, which I did mainly with a band saw and some sanding work. By cutting just outside the layout lines (refer to Figure 3 on the previous page), I was able to follow up with a sanding block and my spindle sander in order to clean up the cuts.

INSTALLATION. Once that's done, position the handle on the box and drill mounting holes through both the handle and lower tray. Then secure it with four more binding posts, as shown in the drawings on the previous page.

GREAT FOR A RANGE OF HOBBIES. Now all that's left is applying stain and finish to the parts (page 67). There are some options you can add as shown below, if desired. The craft center is sure to come in handy around your house in several different ways. It's great for storing sewing supplies, but it also makes a handy storage area for other hobbies, as well. W

DESIGNER'S NOTEBOOK

As presented in this article, the craft center is quite handy to set on a table or desk while you're working on a project. With the addition of the stand shown at right, however, you can elevate the box to a comfortable height to set on the floor beside your chair while you work.

A second design option is found in the upper trays of the center in the form of a gridwork of tray dividers. These simple notched strips divvy up the trays to organize smaller supplies. Full details are available online.

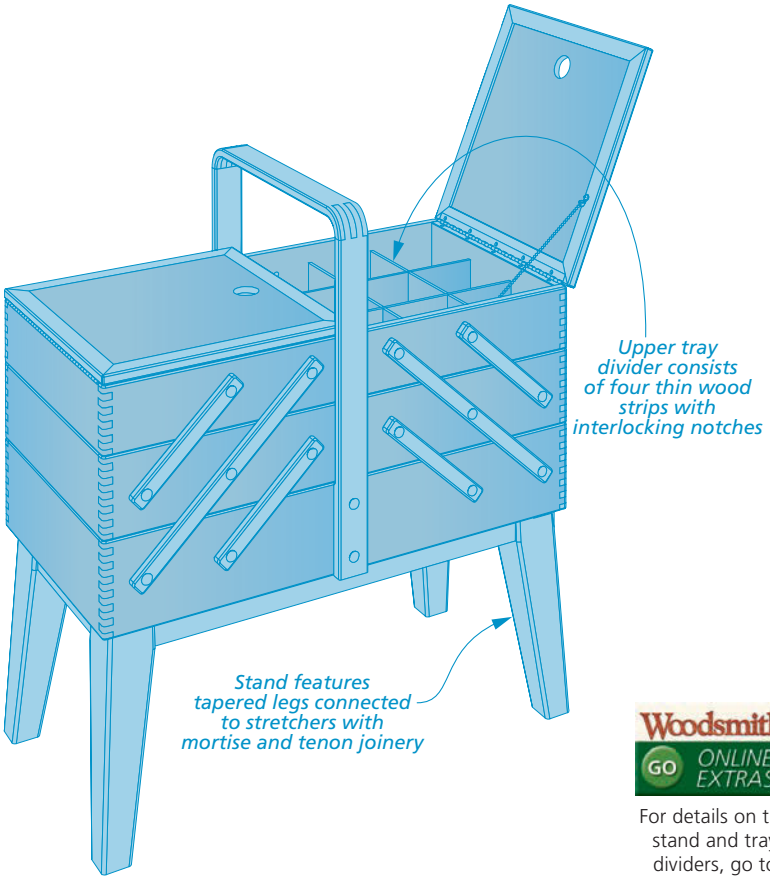

Woodsmith GO ONLINE EXTRAS

For details on the stand and tray dividers, go to Woodsmith.com

Materials, Supplies & Cutting Diagram

A	Lower Tray Sides (2)	3/8 x 3 1/2 - 20
B	Lower Tray Ends (2)	3/8 x 3 1/2 - 10
C	Lower Tray Btm. (1)	1/8 ply. - 9 7/16 x 19 7/16
D	Middle Tray Sides/Ends (8)	3/8 x 3 - 10
E	Upper Tray Sides/Ends (8)	3/8 x 2 1/2 - 10
F	Middle/Upper Tray Btms. (4)	1/8 ply. - 9 7/16 x 9 7/16
G	Lid Frame Sides (8)	3/8 x 3/4 - 10
H	Lid Panels (2)	1/4 ply. - 8 3/4 x 8 3/4
I	Long Pivot Bars (4)	3/8 x 5/8 - 9 15/16
J	Short Pivot Bars (8)	3/8 x 5/8 - 5 15/32
K	Handle Sides (2)	1 x 1 1/4 - 13 3/4
L	Handle Top (1)	1 x 1 1/4 - 10 7/8

- (2) 20mm x 780mm Continuous Hinges
- (20) #4 x 3/8" Fh Brass Woodscrews
- (2) Ball Chain Sets
- (32) 13/64"-dia. x 3/4"-long Binding Posts

1/2" x 6 1/2" - 96" Cherry (Two Boards @ 4.3 Sq. Ft. each)

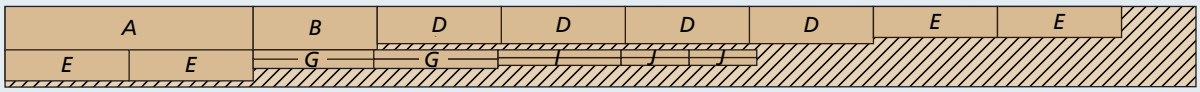

1" x 2" - 48" Cherry (.8 Bd. Ft.)

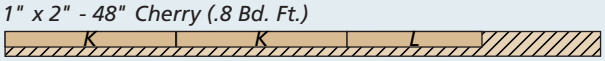

ALSO NEEDED:
One 24" x 48" sheet of 1/8" birch plywood
One 24" x 24" sheet of 1/4" cherry plywood

Heirloom Project

Domed-Top Steamer Trunk

Practical storage space combines with a stylish, custom design in this adaptation of a well-known classic traveling companion.

In the era of steamship and train travel, no self-respecting traveler would dare venture abroad without a fashionable, rugged trunk to safely store their possessions and wardrobe. However, as transportation evolved to modern automobiles and air travel — making way for the more transportable suitcase — most trunks found a new home tucked away in the attic storing family treasures.

But because of their beauty and considerable size, many of these trunks are finding a second life serving as decorative storage solutions. That was the inspiration for the version you see above.

This trunk is not only attractive, but it also provides lots of storage in its main compartment. In addition, a removable "till" with dovetail joinery offers up the perfect place to store smaller items that are easily accessible.

The bulk of the trunk consists of frame and panel construction. Even the lid uses this technique — with one twist. It has a gradual curve from front to back to create the domed shape that gives our trunk its name. The lid construction may appear intimidating. But it's very similar to making the other frame and panels, with a few angles thrown in.

I used quartersawn white oak and plywood throughout on this trunk. That, along with the traditional hardware, creates a piece of fine furniture that you'll be proud to put on full display, instead of letting it gather dust in the attic.

Construction Overview / OVERALL DIMENSIONS: 36"W x 20 3/16"H x 20"D

The domed lid creates plenty of storage space inside the trunk

Traditional steamer trunk hardware provides an authentic look. For source information turn to page 67

Lift-out till is perfect for storing smaller items

Till is constructed with hand-cut dovetails. Turn to page 16 for more about dovetail joinery

Aromatic cedar planks are added to the sides and bottom

Decorative tacks provide a nice detail on the reinforcement bands

Each component of the trunk is a frame and panel assembly using stub tenon and groove joinery

The rugged leather handles provide a comfortable grip for moving the trunk

NOTE: Quartersawn white oak used predominantly throughout trunk

▲ Traditional steamer trunk hardware not only looks fantastic, but it also protects the vulnerable corners and edges of the trunk from damage.

▲ The sturdy dovetail joinery on the lift-out till ensures that it'll stand up to frequent removal, even when it's loaded down with heavy items.

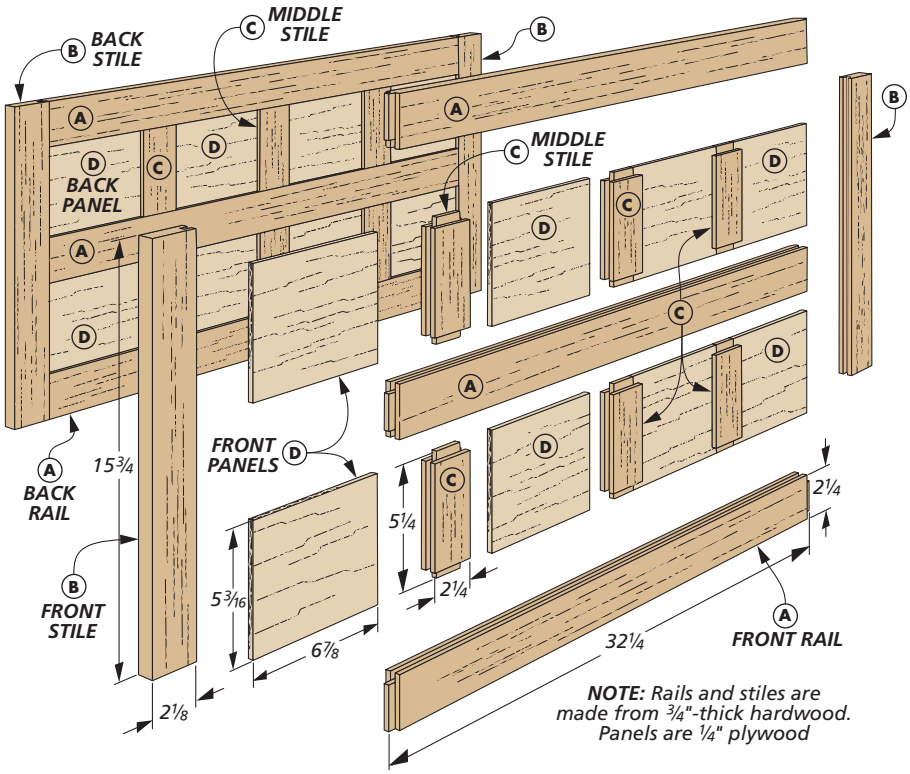

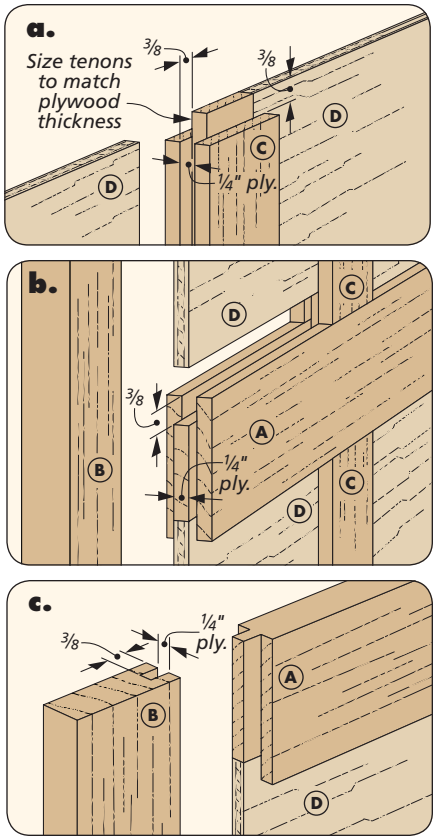

Making the TRUNK FRAMES

The trunk is made up of a group of frame and panel assemblies: The front, back, and two sides form the "walls" of the project, while the bottom and lid enclose it. Each assembly consists of a hardwood frame with plywood panels. This frame and panel design relies on stub tenon and groove joinery, which is both strong and easy to cut at the table saw.

MATERIAL PREPARATION. Before cutting any parts to size, I spent a little time preparing my stock. Since a vast majority of the trunk parts are made from ¾"-thick quartersawn white oak, I surfaced enough lumber up front to ensure a smooth build process.

IDENTICAL ASSEMBLIES. A quick look at the drawings at the top of this page and the next provides the information you need to build the front, back, and sides. As you can see, the front and back are identical assemblies, as are the two side frames. With that in mind, start by cutting all of the stiles and rails to size for all four assemblies. Because of the large number of parts you'll now have on hand, it's a good idea to label

How-To: BUILD THE FRONT & BACK FRAMES

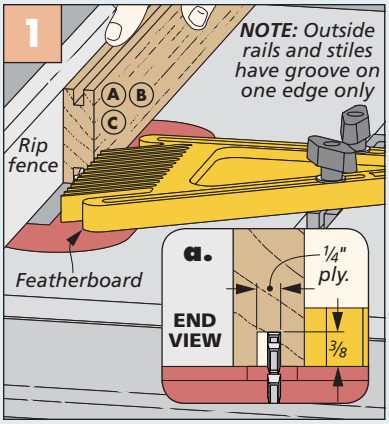

Centered Grooves. Make all of the grooves in two passes, flipping the pieces end-for-end in between.

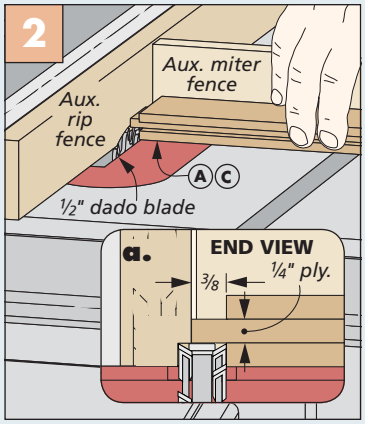

Stub Tenons. Make the cheek cuts for the tenons on the rails and middle stiles.

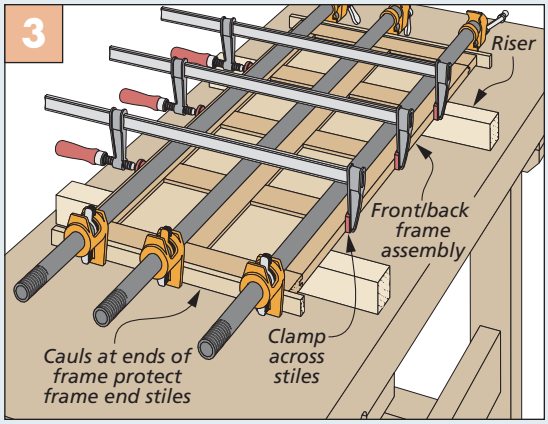

Assemble Front & Back Frames. Some risers and clamping cauls make assembling the front and back frames much easier.

everything in order to keep things straight as you cut the joinery.

CENTERED GROOVES. The plywood panels are held in the frames by a narrow groove cut along the edges of the stiles and rails. In order to size the grooves to fit the plywood, and keep them centered on the thickness of the workpieces, I cut them in two passes. Using a standard 1/8"-wide rip blade, I flipped each piece between passes, as shown in Figure 1 on the previous page. Be sure to note that the outer stiles and rails have grooves on one edge only.

STUB TENONS. Figure 2 at the bottom of the previous page (as well as details 'a,' 'b,' and 'c' on both pages) provide the dimensions and details for cutting the stub tenons at the table saw. With so many parts, this will take some time to complete, so patience is key. This is where having properly labeled parts pays big dividends.

With the tenons complete, cut the plywood panels to size for all four assemblies. But before adding any glue, it's a good idea to do a test fit on each section. Now's the time to make any needed adjustments. When you're satisfied with the fit, you can assemble each panel assembly using glue and clamps. The front and back frames are shown in Figure 3 on the previous page.

RABBET SIDE PANELS. The stiles on the side assemblies receive a rabbet along their outer edge (detail 'd'). These rabbets form a thin tongue that wraps around the stiles on the front and back panels.

The reason I chose this joint is twofold. First, it creates a lot of glue surface, making for a very secure connection. And second, after the trunk is assembled, the corners get eased, and the thin edge of the tongue essentially blends into the mating piece. After the side assemblies come out of the clamps, these rabbets can be cut at the table saw (Figure 1, below).

ASSEMBLE CASE. Finally, glue and clamp the sides to the front and back assemblies to form the basic box, as shown in Figure 2. Because of the thin tongues on the side stiles, I used some thicker strips of hardwood as clamping cauls. This helps to distribute the clamp pressure evenly. Here, it's a good idea to call in a helper to hold the frames together as the clamps and cauls are put in place.

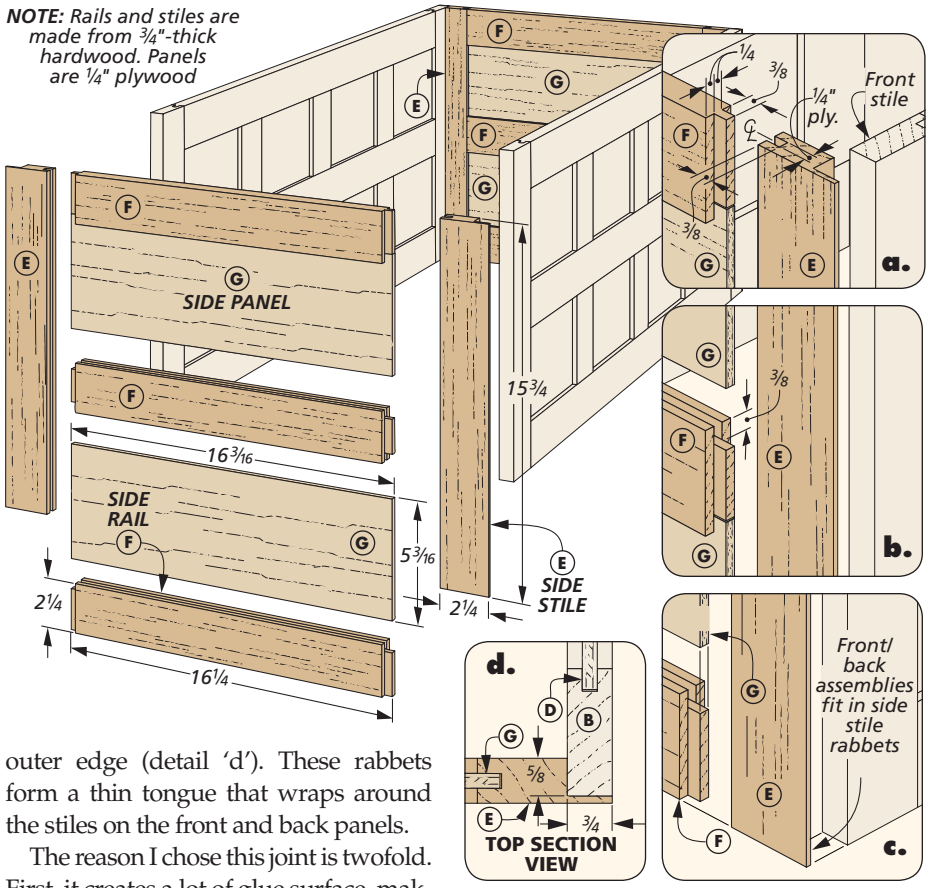

How-To: CUT THE RABBETS & ASSEMBLE CASE

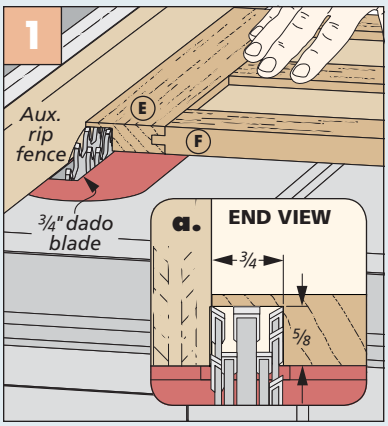

Rabbets. Cut the rabbets on the front and back edges of the side frames after they're assembled.

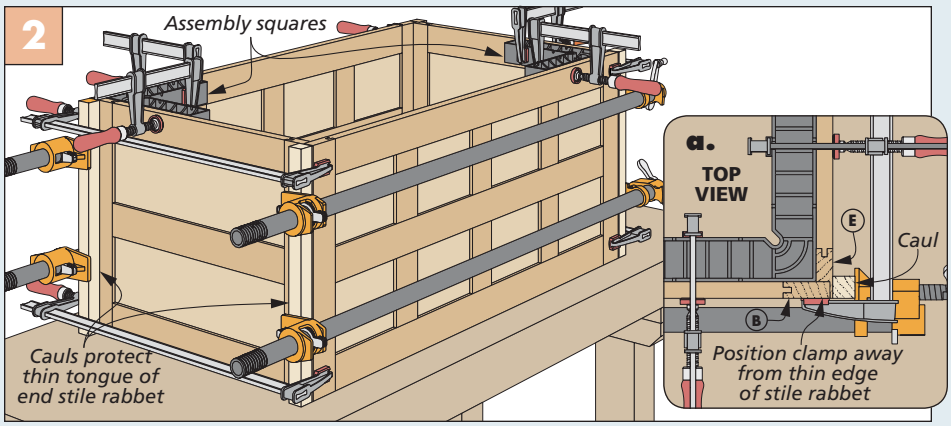

Assemble Case. To avoid putting uneven pressure on the thin tongues on the side stiles, I used some hardwood clamping cauls during assembly. Using a few assembly squares, along with a helper, will make this part of the process go much smoother.

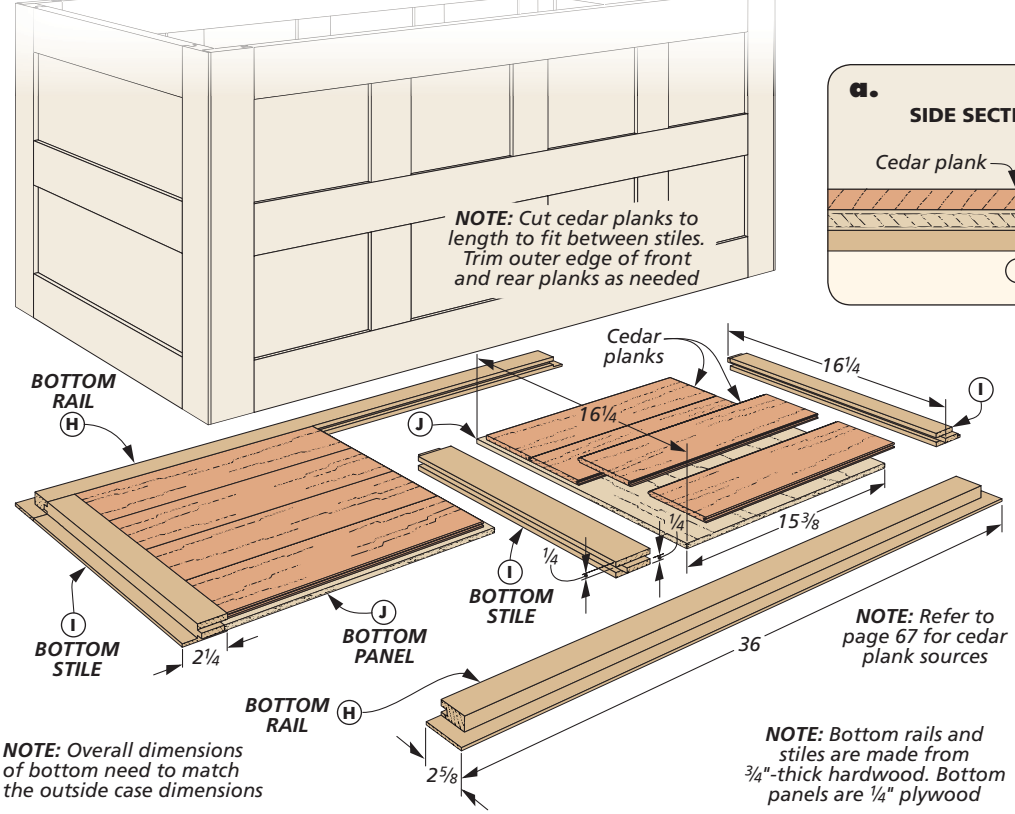

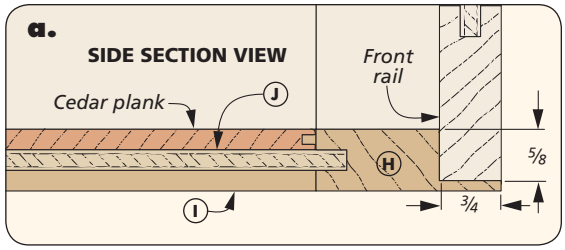

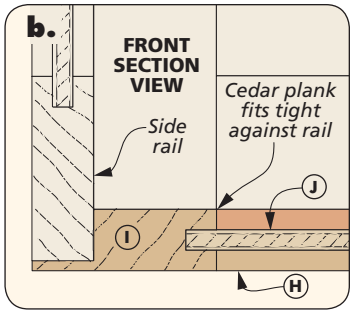

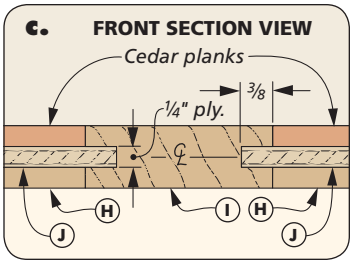

Add the BOTTOM & TILL SUPPORT

With the assembly of the four walls of the trunk in the rearview mirror, you can now turn your attention to the next frame and panel assembly — the bottom. After that you'll add some mitered supports around the inside perimeter of the trunk opening to guide a removable till that you'll make later on.

FAMILIAR CONSTRUCTION. At this point, the bottom construction should be second nature. It follows the same procedure you used to build the front, back, and side frames. After cutting the rails to size, use the same technique shown in the How-To box on page 44 to complete the grooves in the edges of the workpieces. Likewise, the stub tenons on the ends of the side and middle rails follow

How-To: BUILD THE BOTTOM

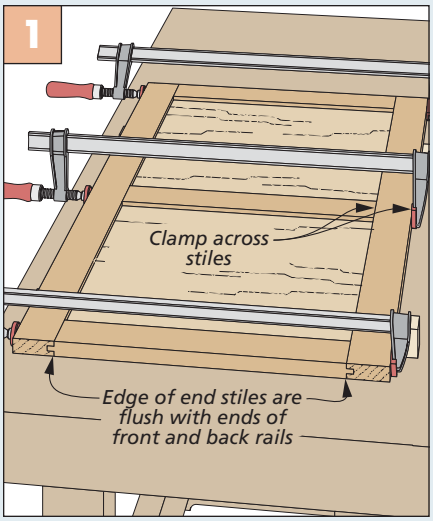

Glue Up Bottom. After cutting all of the joinery, assemble the bottom panel with glue and clamps.

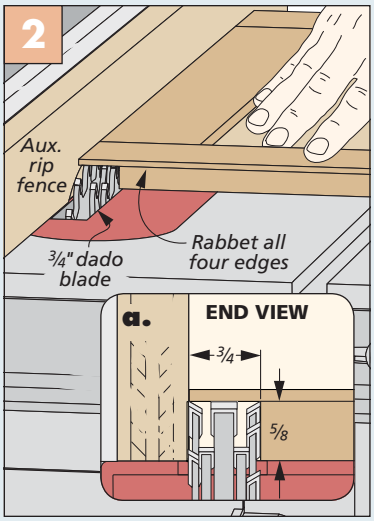

Rabbet Edges. Use a dado blade to form the rabbet around the perimeter of the bottom.

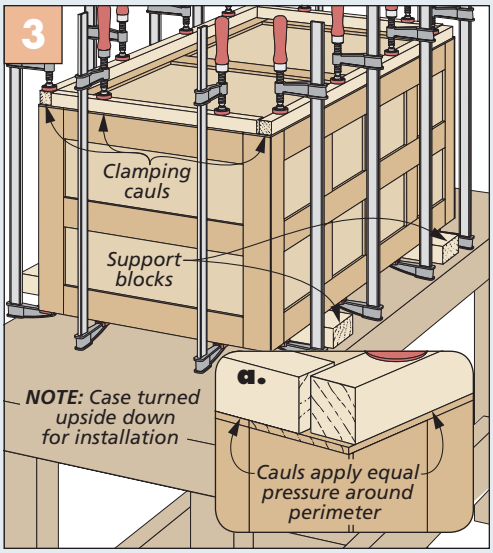

Attach Bottom. Use clamping cauls to evenly distribute the clamping pressure along the edge of the bottom.

the same steps as before. Now cut the two panels to size, do a test assembly, and then glue the bottom assembly together (Figure 1, previous page).

WIDE RABBET. Attaching the bottom to the trunk case works much the same way as the sides were attached to the front and back. Except this time, the rabbet is cut on all four edges of the bottom so that it fits inside the bottom opening of the trunk carcase. After the bottom comes out of the clamps, you can cut this rabbet at the table saw, as shown in Figure 2 on the previous page.

BRING IT TOGETHER. Figure 3 shows the process for adding the bottom to the trunk case. Place the case upside down supported on blocks. And again, using some hardwood cauls to distribute the clamping pressure evenly, assemble the case with glue.

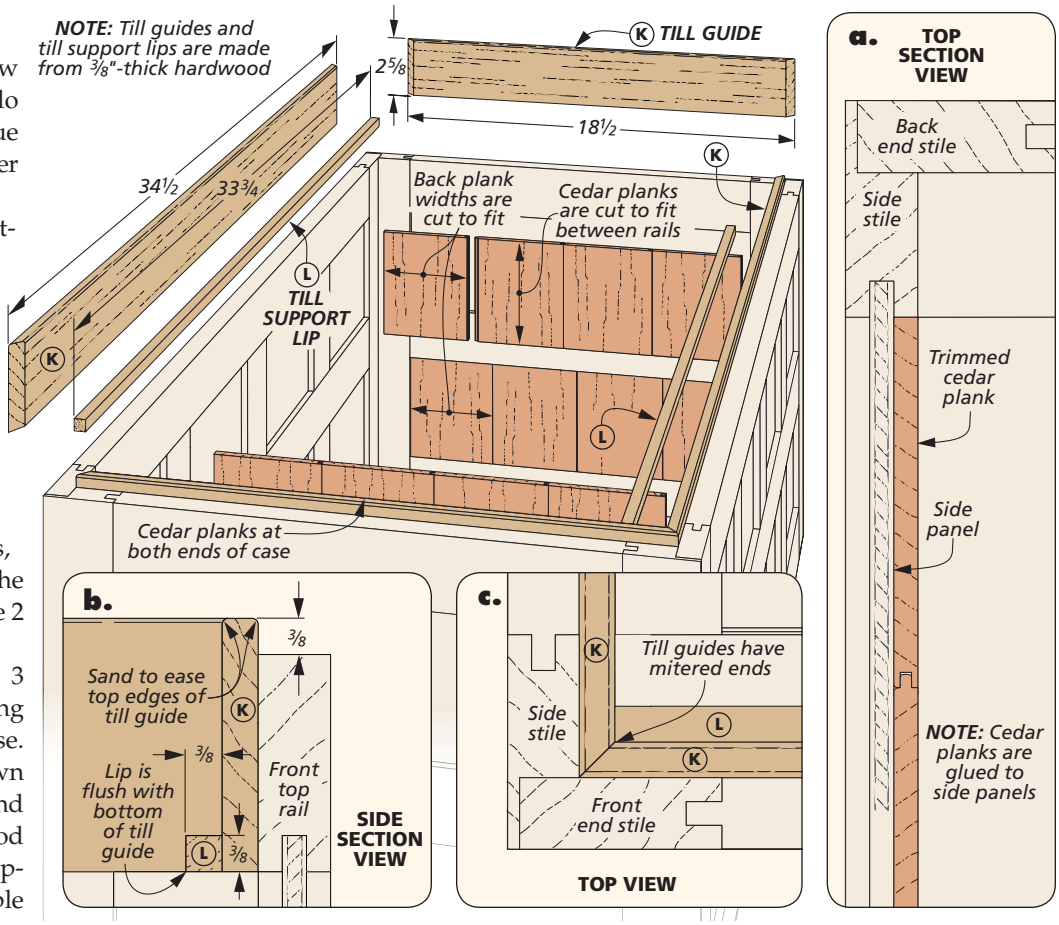

CEDAR PLANK OPTION. If your plans call for using the steamer trunk to hold linens or wool items, then you may want to consider adding aromatic cedar planking to the interior to help keep things smelling pleasant. I added the planking to the bottom, as well as the sides for extra thickness. This extra thickness will be needed for securing the handle hardware later on.

Cedar planking is available at many home centers. The style I used is 1/4" thick and has tongue and groove edges. However, the styles and thickness may vary by vendor. It's simply cut to size (Figure 1) and glued in place between the rails. I cut my pieces to size now but waited to install them until after the interior of the trunk was finished.

How-To: CUT PLANKING & TILL GUIDE

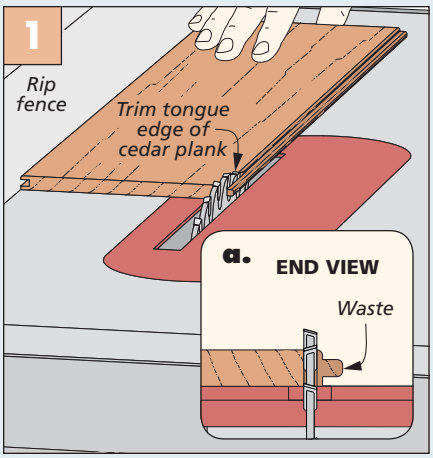

Cut to Fit. Depending on the cedar planking you use, it may be necessary to rip the end pieces to fit.

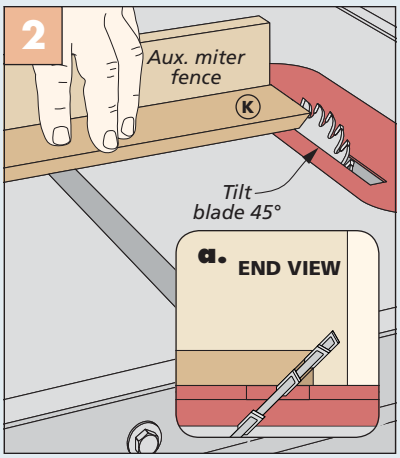

Miter Till Guides. Miter the ends of the till guides for a snug fit around the interior of the case.

TILL GUIDES & SUPPORTS

Next up are some thin till guides with a narrow lip attached at the bottom. These wrap the interior opening of the trunk. The guides and lip provide a resting spot for the removable till. I used 3/8"-thick boards planed down from 1/2"-thick stock for these pieces.

Start by ripping the till guides to width, but leave them a little long. You'll then miter their ends (Figure 2) and glue and clamp them in place as shown in detail 'b,' above. Now ease the upper edges of these parts with sandpaper. This eliminates a snagging point when reaching into the trunk and allows for a smoother opening and closing operation. The two till support lips are simply cut to fit and glued and clamped to the front and back till guides (details 'b' and 'c').

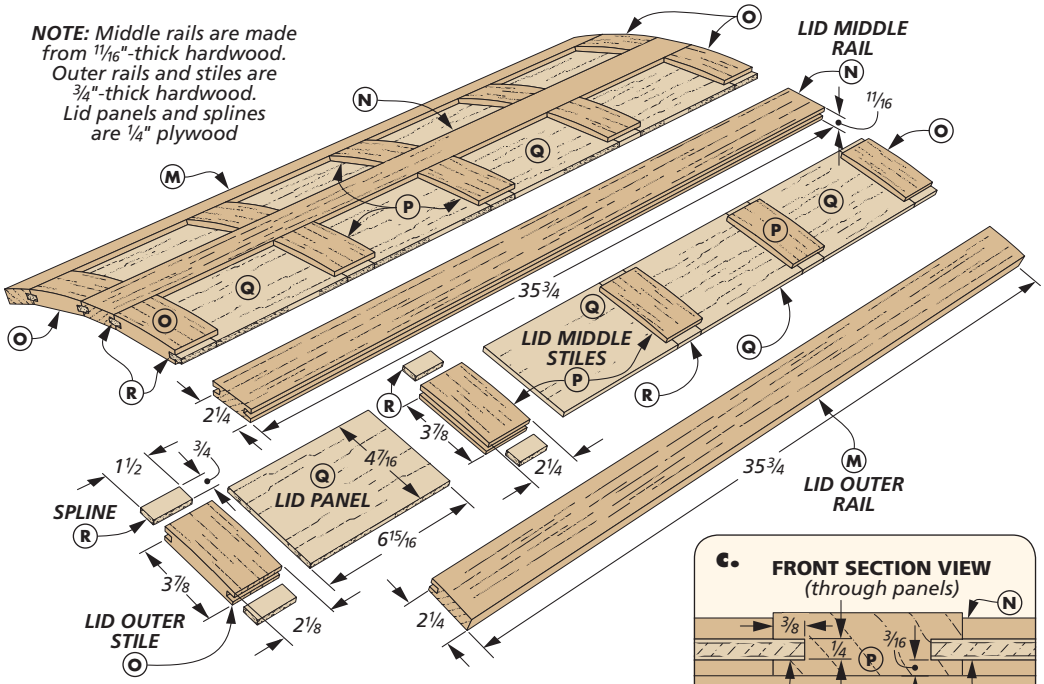

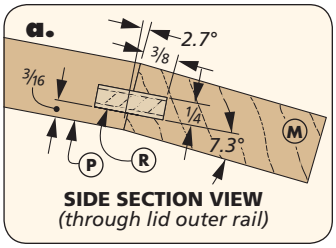

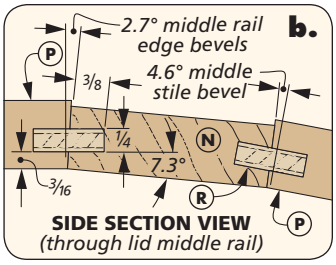

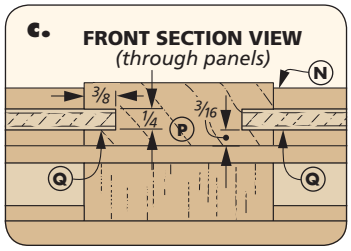

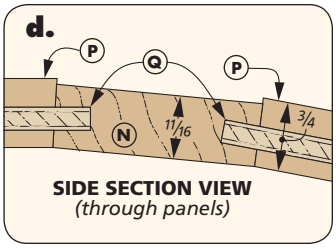

Build the **DOMED LID**

Having the main portion of the chest completed is a big accomplishment. And while everything up to this point has been done by making a lot of 90° cuts, that's about to change.

The lid for the chest has a slight curve from front to back. Making this curve requires some angled grooves and bevel cuts on the four long rails. But to simplify the rest of the lid construction, I used splines instead of stub tenon joinery (like was used on the lower part of the trunk). This means that all of the grooves on the stiles are cut at 90°. Just take things one step at a time (and keep the parts organized) and you'll end up with a perfect-fitting lid.

SQUARE THE RAILS. Begin building the lid by cutting the four long rails to size. You'll notice in details 'b' and 'd' above that the two middle rails are made from slightly thinner stock (11/16"). This makes it much easier to smooth the outer surface of the lid with a block plane after the lid is glued up. The two outer rails are also left a little wide for now (2 3/8"). The outside edges of the lid will be cut to size after assembly.

ANGLED GROOVES. When building the frames on the lower section of the

How-To: GROOVE & BEVEL RAILS

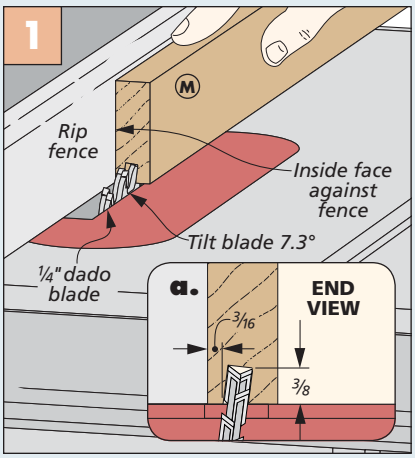

Outer Rails. Use a dado blade to make the groove in the rails. Be sure the inside face is against the fence.

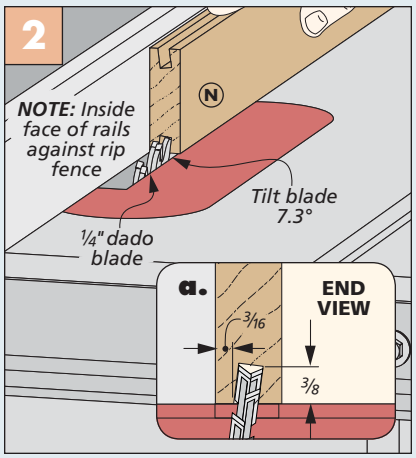

Middle Rails. Maintaining the same setup, cut the grooves in both edges of the middle rails.

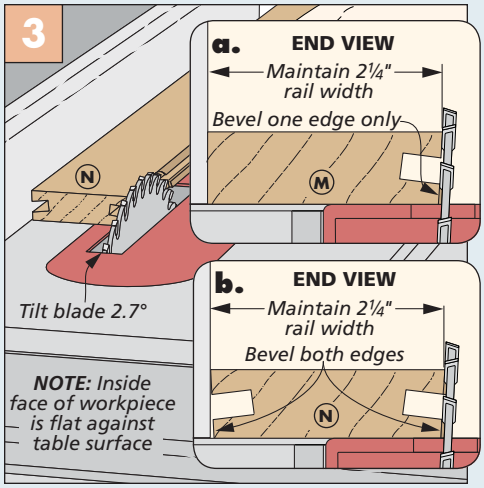

Bevel Edges. Tilt the saw blade and bevel the edges of the rails. Be sure to only bevel the inside edge of the two outer rails.

trunk, I recommended using a regular rip blade to cut the grooves for the plywood panels. This was to make it easier to center the groove on the thickness of the workpiece. But here, not only is the groove off-center, it's angled as well. So instead, I used a ¼" dado blade to cut all of the grooves in the rails and stiles.

ALL ABOUT THE ANGLES. For the next few steps, having a digital protractor or angle gauge is very handy for tilting the table saw blade. The How-To box at the bottom of the previous page shows the angle to use for cutting the grooves in the two outer rails (Figure 1), as well as the two middle rails (Figure 2).

Since the grooves aren't centered, keeping the proper face of the workpiece against the rip fence is the key to success here. Figure 3 provides the information for beveling the edges of these parts.

LID STILES. The fifteen stiles are next on the agenda. Be sure to note that the nine middle stiles are wider than the six outer stiles. With that in mind, cut these parts to size and cut the grooves in the edges and ends, as shown in Figures 1 and 2, at right. I made a couple push block supports to assist in making these cuts. Keep in mind that these grooves aren't centered either.

BEVELING THE STILES. Completing the short stiles is simply a matter of beveling the ends at the table saw. You only need to remove a sliver of material, as shown in Figures 3 and 3a. Using a stop block ensures the parts remain the same finished length.

STAGED ASSEMBLY. After cutting the plywood panels and splines to size, it's time to tackle the lid assembly. To make this step easier to manage, I did the assembly work in stages, starting with the two outer rows as shown in Figure 4. A few hardwood cleats set at 90° help to keep the parts aligned properly.

The middle row of panels, splines, and stiles can be added next. Figure 5 shows the details. I made some simple clamp blocks (detail 'a') to provide a larger clamping surface. A support block under the lid ensures the correct lid height. After the glue sets up, the outer edges of the lid can be trimmed. Take an even amount off each side to arrive at the final dimension (Figure 6).

How-To: MAKE STILES & ASSEMBLE LID

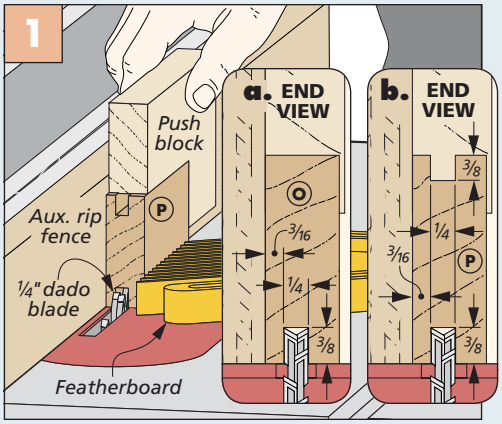

Edge Grooves. With the inside face against the fence, cut the grooves in the outer stiles (detail 'a') and the middle stiles (detail 'b').

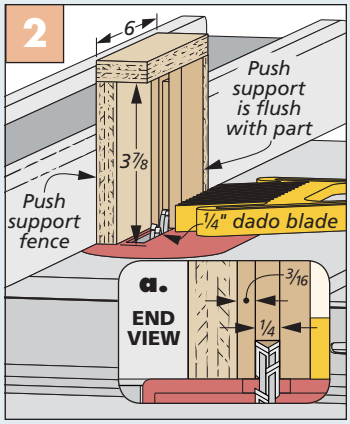

End Grooves. Using a support block, cut the grooves in the ends of the stiles.

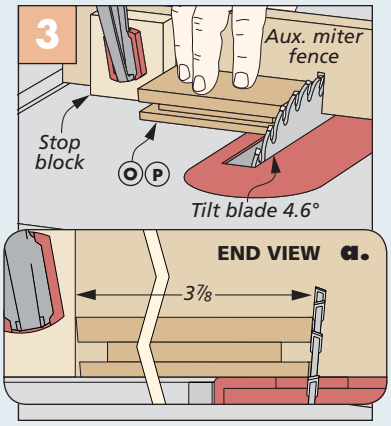

Bevel Middle Stiles. Bevel the ends of the stiles, maintaining their overall length.

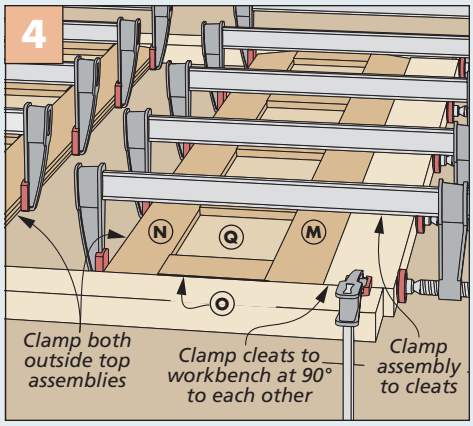

Assemble in Sections. Clamp up the two outer lid assemblies using some cleats positioned at 90° to one another.

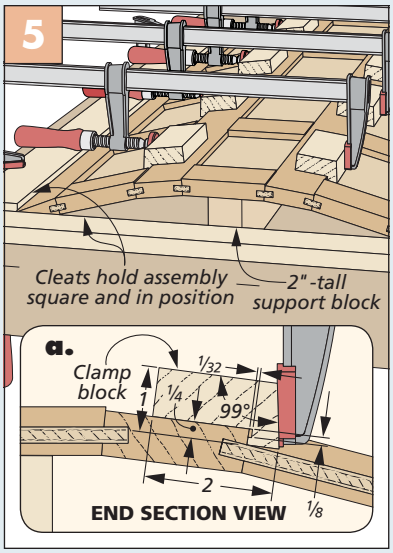

Middle. After the outer assemblies dry, you can add the middle stiles and panels using clamp blocks.

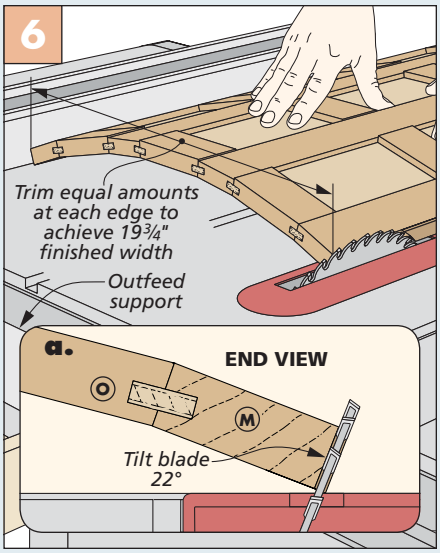

Trim. At the table saw, trim the outer edges to the final size shown. Remove an equal amount from both edges.

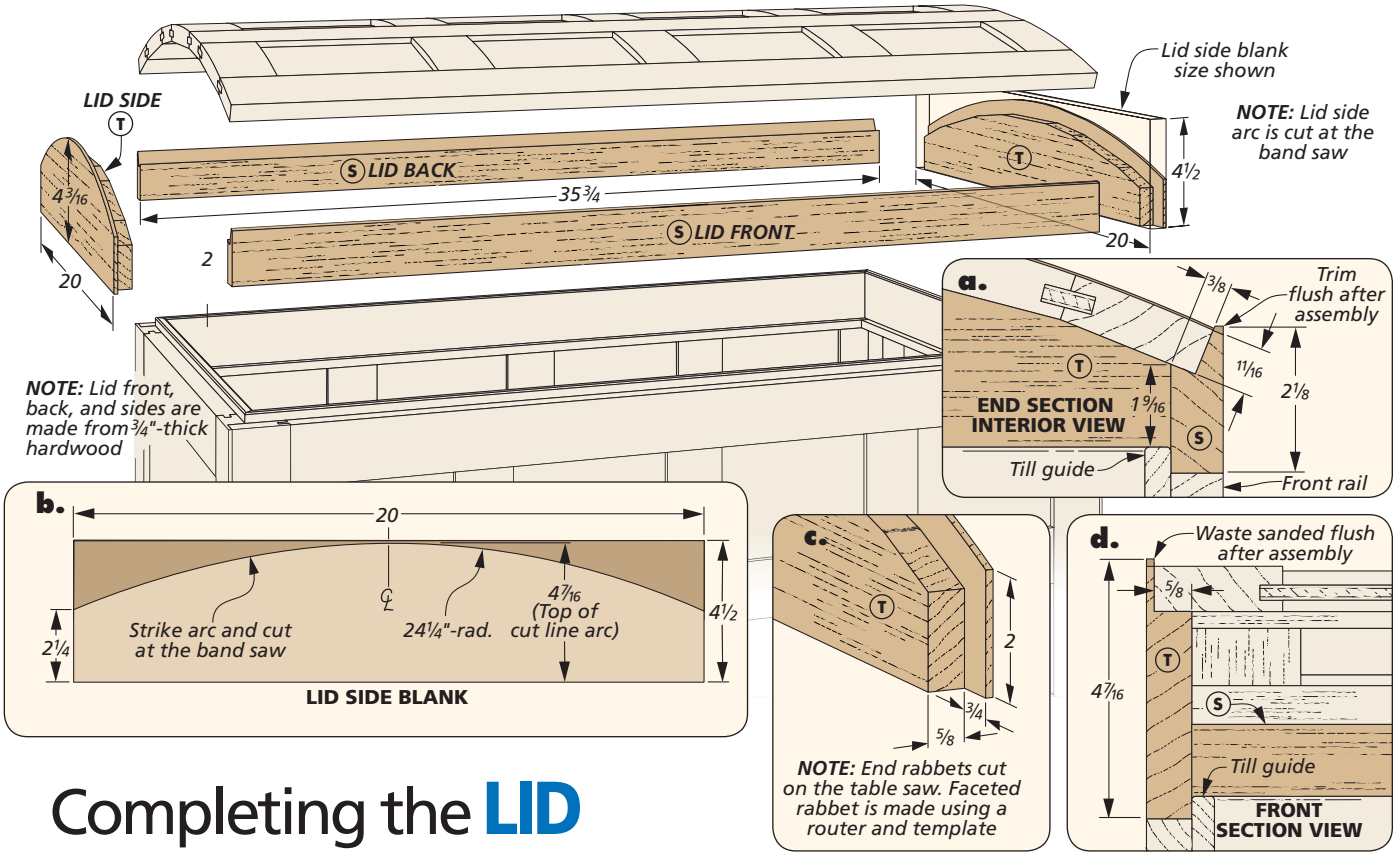

Completing the LID

With the top portion of the lid completed, there are just a few more pieces that need to be added to finish up the assembly. The lid front and back have angled rabbets on their upper edges that wrap the edges of the lid rails. These are simple to make at the table saw. The sides of the lid also have rabbets along their upper edges to wrap the ends of the lid. However, because of the different facets of the underside of the lid, a template and a router are used to cut these rabbets.

LID FRONT & BACK. Start by cutting two blanks to length for the lid front and back. You'll want to cut these a little wider than their finished width, as shown in detail 'a.' The excess will be trimmed off after they're installed. Figure 1 below shows how to cut the rabbets.

Gluing the front and the back to the lid isn't complicated by any stretch, but it does require quite a few clamps to hold everything together. As you can see in Figure 2 below, I made a spacer to

How-To: ADD THE LID FRONT & BACK

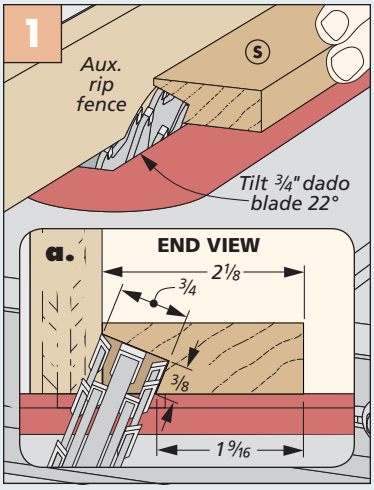

Angled Rabbets. Use a dado blade to form the rabbets along the edge of the front and back.

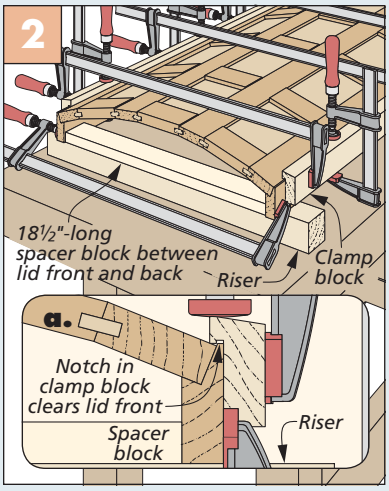

Glue to Lid. Using risers, spacer blocks and clamp blocks, glue the lid front and back in place.

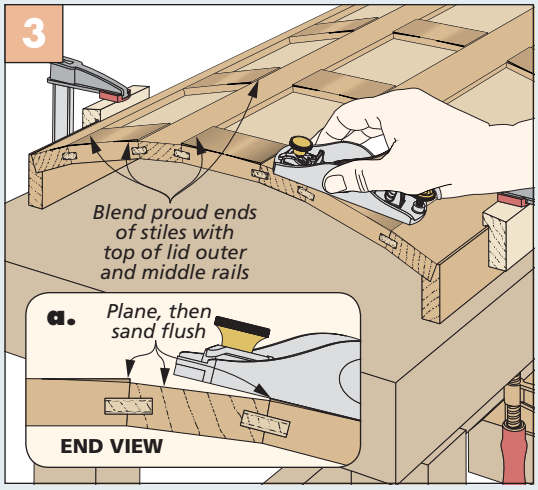

Shape the Lid. A block plane makes quick work of rounding the ends of the stiles. Sand out the plane marks when done.

fit between the lid front and back. This prevents the clamps from putting too much pressure on the curved lid and pulling it out of shape. I also made a couple of long clamping blocks using the same profile from earlier when assembling the lid sections. These provide a nice, flat clamping surface for assembly.

The little sliver of material on the lid front and back that sticks up over the top of the lid is planed down and sanded smooth. I also took the time at this point to slightly round the ends of the stiles to make them flush with the rails (Figure 3, previous page).

LID SIDES. The sides of the lid are a little more complex than the front and back pieces and require some close attention to ensure a good fit. But they too begin as a couple of extra-wide blanks. The rabbets cut along both ends are pretty straightforward (Figure 1).

Next, hold the blanks against their respective ends of the lid and trace the curved, outside profile of the lid onto the sides. You can then cut these curves at the band saw, being sure to cut on the waste side, about 1/8" away from the line. This excess material gets sanded smooth after the sides are glued to the lid.

TEMPLATE. The next two drawings show the rest of the process for completing the sides. And that starts by tracing the inside curve of the lid onto a piece of MDF that will act as a template (Figure 2). After cutting out the template at the band saw and checking the fit against the lid, it's held to the side with double-sided tape. Don't try to remove all of the material in one pass (Figure 3). Take light cuts, moving the bit closer to the template each time.

The sides are then glued in place as shown in Figure 4. A couple of cauls help to distribute the clamping pressure. When the clamps come off, the upper edge of the sides can be sanded smooth with the lid surface.

DETAILS. Before placing the lid on the trunk, I added the four decorative reinforcement bands. At this point, I laid out and drilled all of the mounting holes for the hardware shown in the main drawing above. However, I waited to attach things until after I had applied the finish.

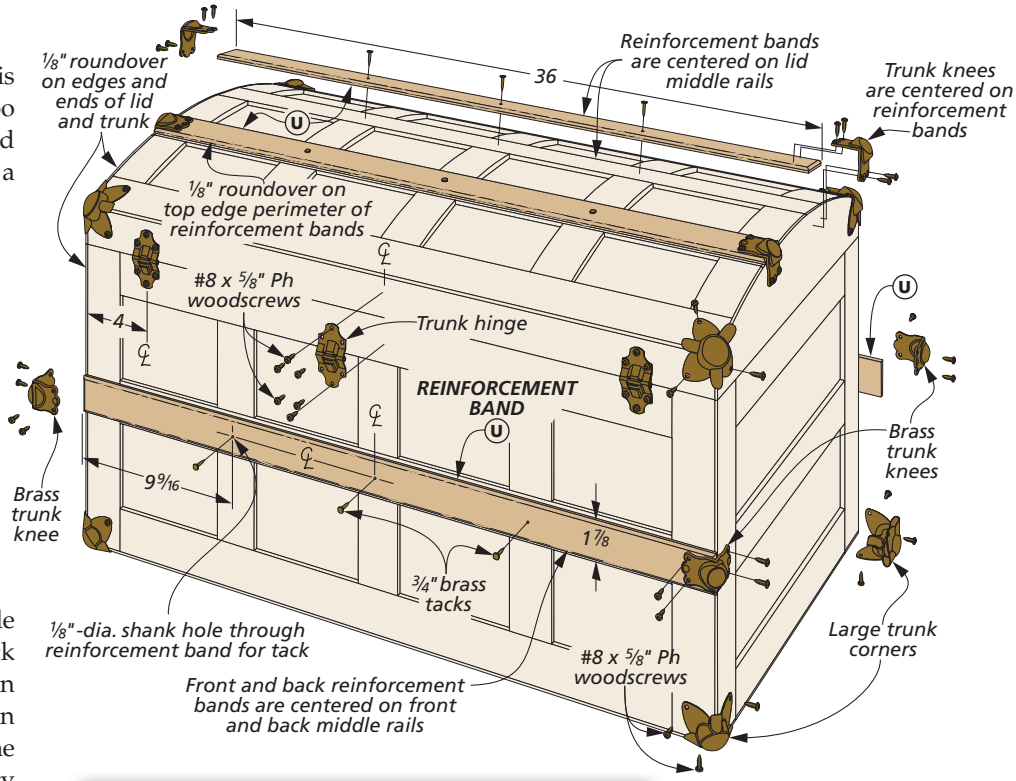

How-To: MAKE THE LID SIDES

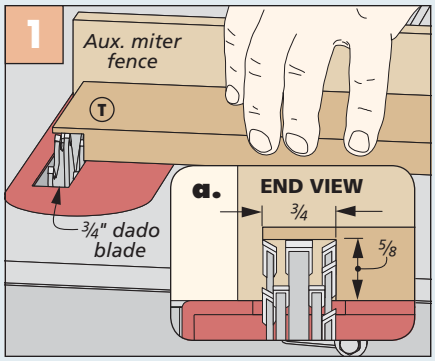

Rabbet Ends. The rabbets along the ends of the sides are easy to make at the table saw with a dado blade.

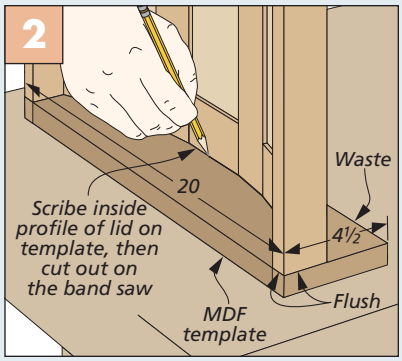

Template. Make a hardwood template to the size shown and trace the inside profile of the lid.

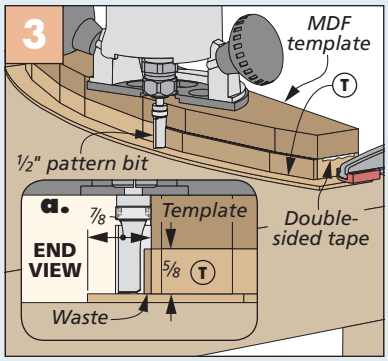

Rabbet. With the bit set to the depth shown, make several skim cuts to remove the waste.

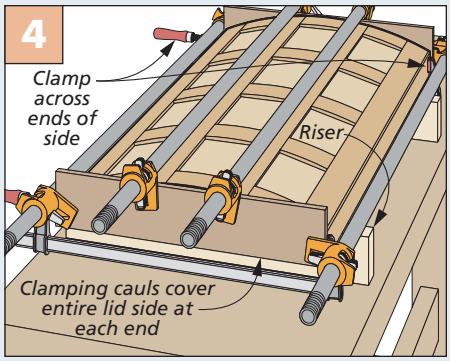

Glue Sides in Place. A couple of cauls help distribute the clamping pressure evenly along the sides.

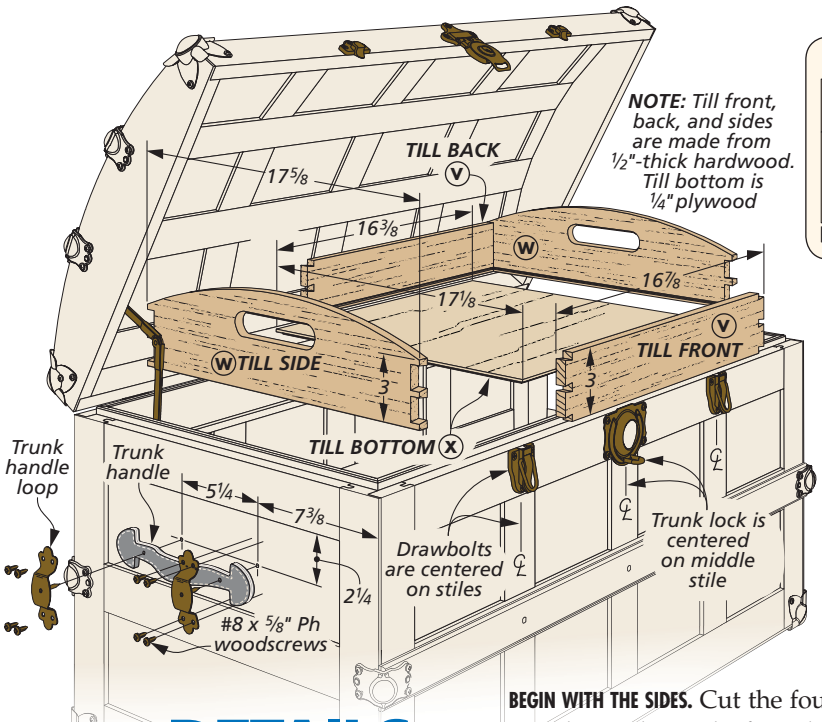

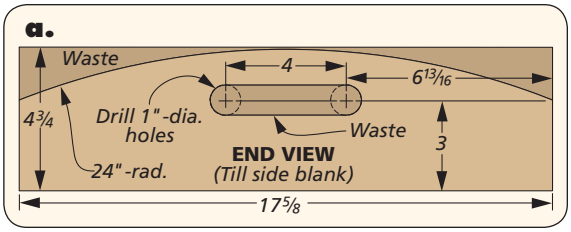

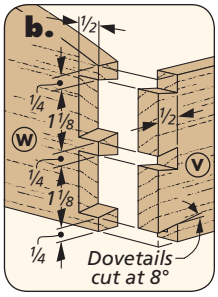

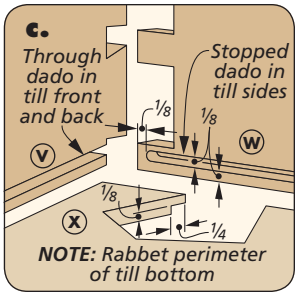

Final DETAILS

In order to keep small items from getting lost in the large main compartment, I added removable till to the trunk. The box-shaped till consists of a front, back, two sides with handholds, and a plywood bottom.

It would have been easy to slap something together using simple joinery, but since this is an heirloom project, I opted for dovetail joinery at the corners. This small attention to detail really makes the till stand out when the lid of the trunk is open for display.

BEGIN WITH THE SIDES. Cut the four pieces to size that make up the front, back, and sides. You can set the front and back aside for now to focus on the sides.

After laying out the curve along the top edge and the handhold positions (detail 'a'), I moved to the drill press and drilled a couple of holes to define the ends of each opening (Figure 1). A jig saw makes quick work of removing the waste between the holes. For now, I refrained from cutting the arcs on the top edge until after the dovetailed corners were complete.

DOVETAILS. Using a dovetail jig and router is one way to complete the dovetail joints for the till. However, because of the relatively small number of pins and tails needed, I opted to cut the dovetails by hand. The article on page 16 provides all of the details you'll need for laying out, cutting, and fitting a hand-cut dovetail joint.

BOTTOM GROOVE & PANEL. A rabbeted plywood panel used for the bottom of the till fits in an ⅛"-wide groove cut along the inside edge of the till parts. So after the dovetails are complete (but before assembling the till), I cut and sanded the arcs on the side pieces and then headed to the router table to make the groove on all four pieces, as shown in Figure 2 below. Stopping the groove short on the side pieces means there's no gap to plug after assembly. The article on page 12 provides more insight into making stopped grooves.

How-To: MAKE THE TILL

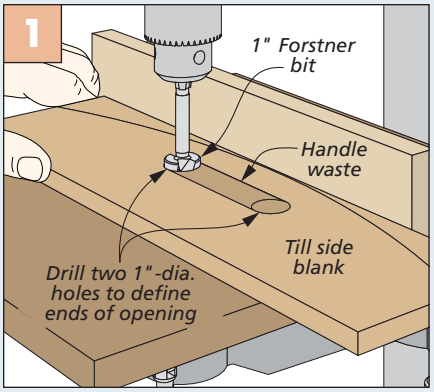

Remove Waste. Use a Forstner bit to form the ends of the handle. A jig saw removes the rest of the waste.

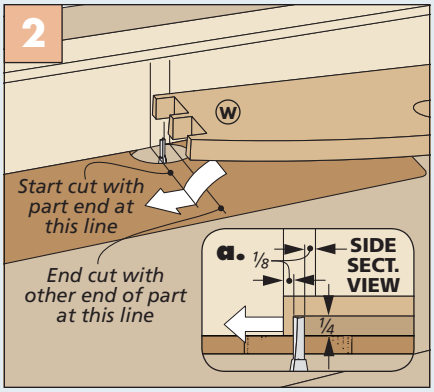

Stopped Groove in Ends. Making a stopped groove in the ends eliminates the need to plug the gap.

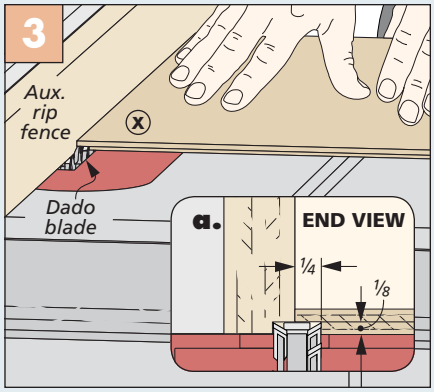

Rabbet Bottom Panel. The bottom of the till is rabbeted on all four edges. A dado blade makes quick work here.

The plywood panel for the bottom is cut to size next. A rabbet cut along all four edges forms a tongue that fits the grooves you just made at the router table (Figure 3). After doing a careful test fit, the till can be assembled with glue.

HARDWARE & FINISH

To finish up the trunk, I added the rest of the hardware. The positions of these pieces are shown in the How-To box at right. Again, I laid out and drilled all of the mounting holes up front, but I waited to permanently attach things until after I had applied the finish.

Speaking of the finish, I opted to stain my trunk and also gave it a light coat of glaze to give it an "aged" look. The photos on pages 42 and 43 show what I mean. You'll find a list of the products I used in Sources on page 67. Now with the finish complete and all of the hardware in place, this piece is ready to assume a prominent place in your home — preferably not in the attic. W

How-To: ADD THE REMAINING HARDWARE

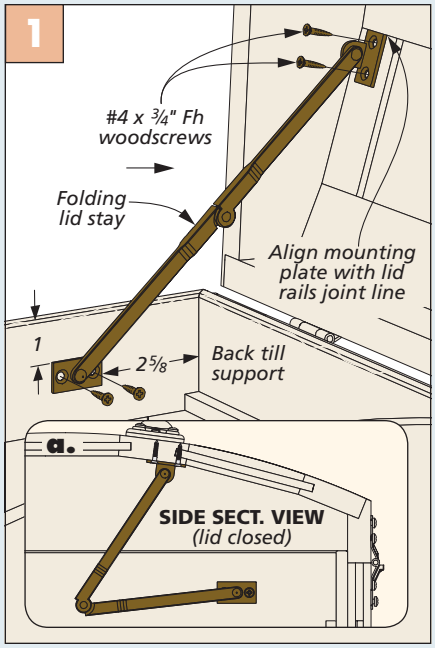

Lid Stay. The surface-mounted lid stay is positioned as shown. Only one lid stay is needed to hold the lid open.

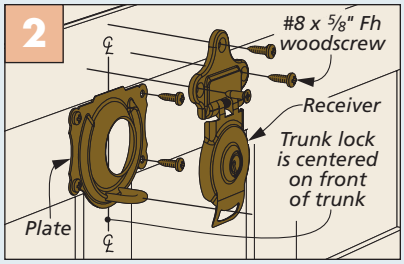

Lock. The receiver section of the two-piece trunk lock is mounted to the lid — the plate to the trunk.

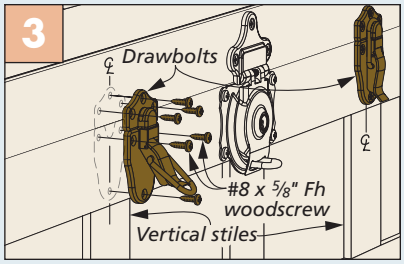

Latches. Align the two drawbolts so they're centered above the vertical stiles on the front of the trunk.

Materials, Supplies & Cutting Diagram

A	Frt./Back Rails (6)	¾ x 2¼ - 32¼
B	Frt./Back End Stiles (4)	¾ x 2⅛ - 15¾
C	Frt./Back Mid. Stiles (12)	¾ x 2¼ - 5¼
D	Frt./Back Panels (16)	¼ ply. - 5 3/16 x 6⅞
E	Side Stiles (4)	¾ x 2¼ - 15¾
F	Side Rails (6)	¾ x 2¼ - 16¼
G	Side Panels (4)	¼ ply. - 5 3/16 x 16 3/16
H	Bottom Rails (2)	¾ x 2¼ - 36
I	Bottom Stiles (3)	¾ x 2¼ - 16¼
J	Bottom. Panels (2)	¼ ply. - 15⅜ x 16¼
K	Till Guide	⅜ x 2⅝ - 112 rgh.
L	Till Support Lips (2)	⅜ x ⅜ - 33¾
M	Lid Outer Rails (2)	¾ x 2¼ - 35¾
N	Lid Middle Rails (2)	11/16 x 2¼ - 35¾
O	Lid Outer Stiles (6)	¾ x 2⅛ - 3⅞
P	Lid Middle Stiles (9)	¾ x 2¼ - 3⅞
Q	Lid Panels (12)	¼ ply. - 4 7/16 x 6 15/16
R	Splines	¼ ply. - ¾ x 72 rgh.
S	Lid Front/Back (2)	¾ x 2⅛ rgh. - 35¾
T	Lid Sides (2)	¾ x 4½ rgh. - 20
U	Reinforcement Bands (4)	¼ x 1⅞ - 36
V	Till Front/Back (2)	½ x 3 - 16⅞
W	Till Sides (2)	½ x 4 11/16 - 17⅝
X	Till Bottom (1)	¼ ply. - 17⅛ x 16⅜

- (1) 15 Sq. Ft. Package Cedar Planking
- (8) Antique Brass Large Trunk Corners
- (8) Antique Brass Trunk Knees
- (2) Black Trunk Handles
- (4) Antique Brass Trunk Handle Loops
- (2) Antique Brass Trunk Drawbolts
- (1) Antique Brass Trunk Lock
- (3) Trunk Hinges
- (12) ¾" Brass Tacks
- (1) Folding Lid Stay
- (4) #4 x ¾" Fh Woodscrews
- (107) #8 x ⅝" Ph Woodscrews

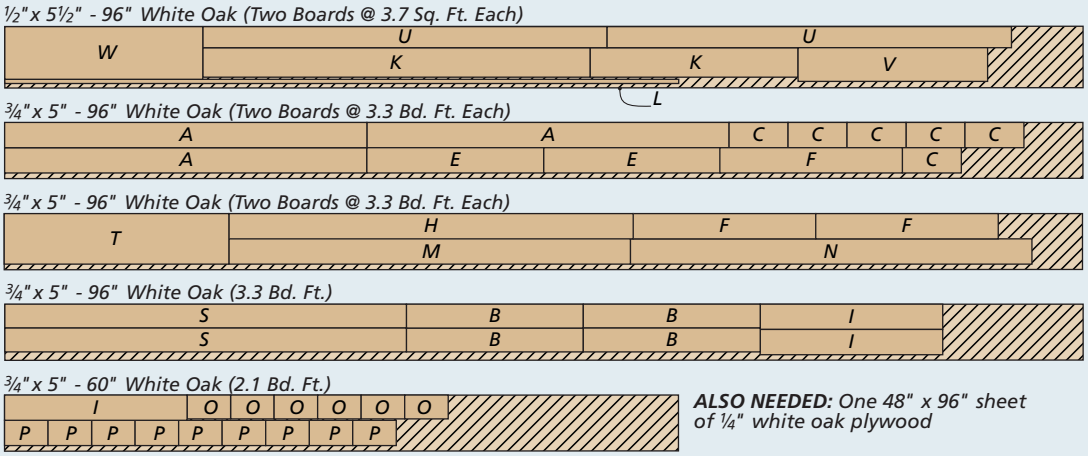

NOTE: *Parts U are resawn and planed to ¼" thick. Parts K and L are planed to ⅜" thick. Parts N are planed to 11/16" thick*

ALSO NEEDED: *One 48" x 96" sheet of ¼" white oak plywood*

get more from your Disc Sander

When space is at a premium in a shop, deciding which tools to add can be a real juggling act. Tools that pull double duty are worth a second look. One worthwhile combination tool is a belt/disc sander. In the space of one tool, you get two distinct smoothing and shaping tools in a compact footprint. Belt/disc sanders come in a range of sizes. But for my money, the larger tools are the most versatile. Tools with 9" to 12"-diameter discs and 4" to 6"-wide belts are your best bet for most woodworking tasks.

Once you have the sander in your shop, you're sure to find a variety of uses for it. However, you're faced with a decision. Which part of the tool should you use, the disc or the belt? Both have their advantages, but it takes a few tips and tricks on each to get top-notch results.

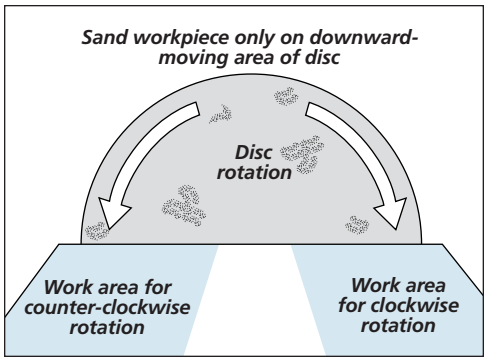

START WITH THE DISC. In this issue, I'll cover the disc sander. (The techniques shown here apply to stand-alone disc sanders, as well.) In the next issue, we'll look at getting the most from the belt sander part of the machine.

The advantage of a disc sander is that the metal disc offers a flat, solid reference surface for precision work. It's ideally suited for shaping crisp, smooth surfaces without rounding the edges. The applications run the gamut from smoothing convex curves and radii to trimming project parts to length and fine-tuning miter joints.

THE RIGHT GRIT. Even though a disc sander is used for accurate work, that doesn't mean you need a fine-grit sanding disc. On the contrary, I find that an 80-grit or 100-grit disc is ideal, as shown in the photo at left. These discs work fast and run cool while still leaving a smooth surface.

▼ Disc sanders run more efficiently when using coarse 80-grit or 100-grit discs to prevent burning a workpiece.

THE RIGHT SIDE. When it comes to using a disc sander, you have to work from the correct side. Always work on the side where the disc rotates down into the table, as in the drawing on the previous page. (Not all disc sanders rotate in the same direction.) Working this way means the rotation of the disc helps hold the workpiece in place on the table.

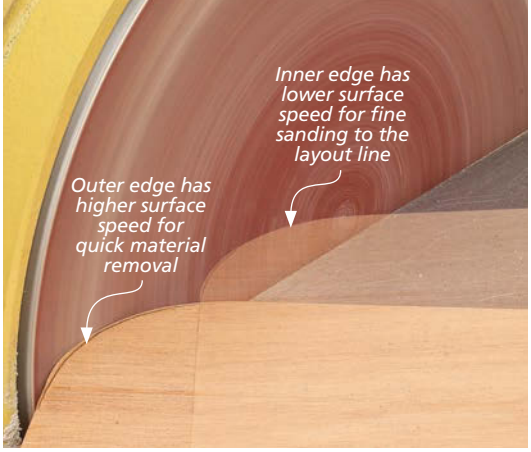

CUT, THEN SAND. To take best advantage of using a disc sander, you should think of it as a precision refining tool rather than a coarse shaping tool. So unless you're shaping a small radius, it's faster and more efficient to cut away most of the waste with a jig saw or the band saw, as you can see in the upper left photo.

Grinding away a lot of material with a disc sander may lead to some problems. First off, heavy sanding can be time-consuming. Sanding a lot of material shortens the life of the disc unnecessarily and could lead to burning the workpiece, as well.

AVOID THE BURN. Burning is the number one enemy. Lingering in one place allows heat to build up and scorch the wood. And burned surfaces make poor glue surfaces. What's more, resin from the wood can transfer to the disc and cause glazing, which often ruins the disc. The lower left photo shows a reliable method for keeping the disc in top shape.

One way to avoid burning is to keep a workpiece moving while in contact with the disc. This means both moving the workpiece so that you're sanding a larger area and moving the workpiece along the table. Allow the sanding disc to do the work rather than forcing the workpiece into the disc.

SPEED ZONES. There's another aspect to sanding in different places along the disc. The outer portion of the disc is moving at a faster surface speed compared to the inner portion of the disc. In fact, the outside of the the disc is moving twice as fast as the portion that's halfway from the center of the disc. To put that to use, I use the faster-moving outer part to remove material quickly, as shown in the upper right photo. Then I move to the inner part to fine-tune the work as I approach the layout lines.

FULLY SUPPORTED. Up until now, the techniques discussed have related to all kinds of work at a disc sander. But there are two common sanding tasks where a little more workpiece control is needed.

When sanding the end of a workpiece to bring it to length, holding the piece with your hands is a recipe for spoiling the end. The solution is to use a miter gauge, as shown in the middle photo below. The table on most disc sanders comes with a slot for a miter gauge.

It's a good idea to add an auxiliary fence to increase the support surface. In addition to keeping the workpiece square to the disc, the miter gauge fence allows you to ease the workpiece into the spinning disc with a high degree of control. With this setup, you'll find that it's possible to quickly remove small amounts of material to work up to a layout line and a perfect fit.

MITER TRIMMING. Fine-tuning miters is the other task where a miter gauge comes in handy (lower right photo). More often than not, you're tweaking the angle, as well as the length of a part, in order to get a tight-fitting joint. With the miter gauge and auxiliary fence, you can use playing cards, business cards, or even layers of masking tape as shims to adjust the angle.

While a disc sander may not be the star of a workshop, it is a dependable workhorse. And with the right techniques, you can expect consistent results. W

▲ Holding a crepe stick against the spinning disc removes built-up dust, prolonging the life of the disc.

▲ A miter gauge with a plywood auxiliary fence provides solid support for square cuts.

▲ When trimming miters, you sometimes need to fine-tune the angle. Slipping playing card shims between the workpiece and fence lets you sneak up on a tight fit.

cool ways to

Personalize Your Work

After you complete a woodworking project, it's understandable that you'll have some pride in a job well done. It's this feeling that leads many woodworkers to commemorate their work — and even provide a "historic record" of the completed piece in some cases — by personalizing it with a brand, a name, and/or a date of completion.

When it comes to the options for adding your personal mark to your projects, there are quite a few available. You can find everything from branding irons customized with a logo to smaller plates or medallions. Here's a roundup of some of our favorites.

BRANDING IRONS. A branding iron is a traditional way to add your name and a bit of personalization to your project. Several retailers offer custom options that are available within a few weeks after you order them.

Branding irons come either as a torch-heated type that you heat yourself, or an electric iron that you plug in and switch on (left photos). Though more expensive, I found that the electric iron provided more consistent results. It also featured a removable head, so replacement heads can be purchased for less money once you buy the initial iron.

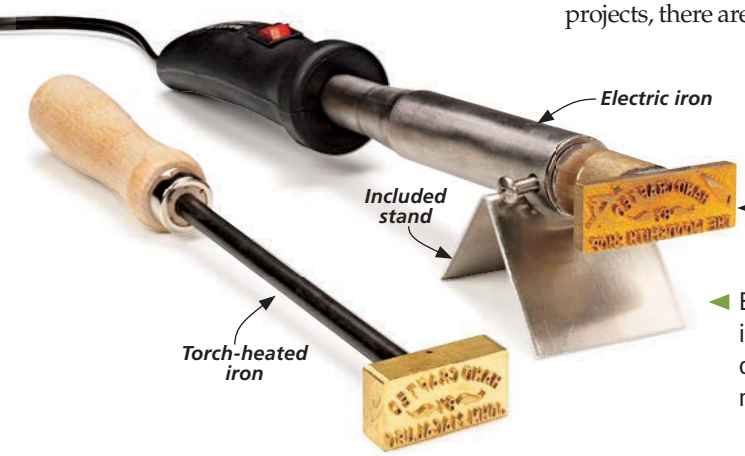

Electric and torch-heated irons are available. Electric ones are pricier but provide more consistent results.

This simple hand stamp comes with all the stamps you need to create a custom message. It's a good idea to use a couple of layout lines to keep things aligned as you begin stamping with the tool (left photo).

The most cost-effective way to obtain a personalized branding iron is to choose one of the boiler plate designs available from *Rockler* and a few other suppliers (refer to page 67). These companies have several designs that you can choose from. Then, you provide the custom text that will accompany the design. The iron shown in the main photo on the previous page is an example of this.

These suppliers and a few others will also produce a completely custom branding iron with your logo on it. But you can expect a higher price and a longer wait time for this type of iron.

Once you have your branding iron, it takes a bit of a trial and error to get the heat and pressure for a good brand just right. It also varies from wood to wood. Burning a brand only takes a few seconds, so I like to practice several times on a scrap of wood that's the same species as my project before I brand the actual project (main photo, previous page).

STAMPS. Another option is to stamp, or emboss, the surface of the wood with a personal mark. *Highland Woodworking* offers a kit with 36 stamps, including all the (capital) letters, numbers, and an "&" symbol (right photo above). Each stamp is approximately ¼" tall. The spring-loaded stamp works with simple hand pressure.

Of course, this kit requires stamping just one letter at a time, so getting good results requires some careful setup. Here again, I like to practice a bit on a separate scrap piece before stamping my actual project. A little layout work with a ruler and a pencil will also help you keep your stamp aligned as you apply it to your project (upper left photo).

Custom stamps with a personalized message or logo are also available for a higher price. The smaller personalized stamps can be applied with a hammer blow, while the more elaborate plates will require a mechanical press in order to stamp the wood effectively.

CHOICES ABOUND. For even simpler personalization options, refer to the box below. These medallions and plates are inexpensive and simple to add to your completed projects. Whichever method you choose, adding a custom name, date, or other message ensures that your work will stand the test of time, no matter who inherits it down the road. W

How-To: APPLIED SOLUTIONS

Another personalization option is to add a custom medallion or name plate. These plywood medallions (below and near right) can be ordered with custom text and images. They fit in a shallow hole drilled with a Forstner bit and can also be stained and finished to match your project. At the far right, these metal name plates are laser-etched and available in gold or black. They're simply screwed to the surface of the finished project.

These plywood medallions fit in a shallow 1" hole. They're stained or finished along with the rest of the project.

Laser-etched name plates are an inexpensive but nice-looking option for commemorating a completed project.

woodworking essentials

7 shop tips to improve Efficiency & Accuracy

Let's face it — whether the project you're working on is a big piece of furniture or a small box, there's going to be some repetition involved in building it. It's all just part of the process of woodworking.

Though repetition is a necessary part of the craft, it doesn't have to be something you dread. In fact, I find quite the contrary is true. Over the years, I've developed several ways to take advantage of this repetition in order to speed up the project-building process.

The best part about these strategies is that many of them not only help you work faster, but they also improve accuracy. This leads to more consistent parts, tighter-fitting joints, and other hallmarks of solid construction. Here are some tricks to speed up your next project.

[1] Get Two (or More) from One

With many projects, your first inclination is often to start trimming parts down to their final sizes right away. However, if you're dealing with parts that are going to have identical joinery, as well, then you might want to hold off on the final sizing. Instead, a better approach can be to cut the joinery in a thicker or wider blank first. Then, you can cut the workpieces to their final size in order to produce project parts with accurate, identical joinery.

Some examples of when this technique can be effective include matching case sides with the same dadoes and rabbets. Here, you'll cut the joinery in an extra-wide panel first before ripping the two case sides to final width (refer to the main photo above). This approach also works for parts like thin divider strips with interlocking notches. The notches can be cut on a thick blank before ripping the individual strips from that blank.

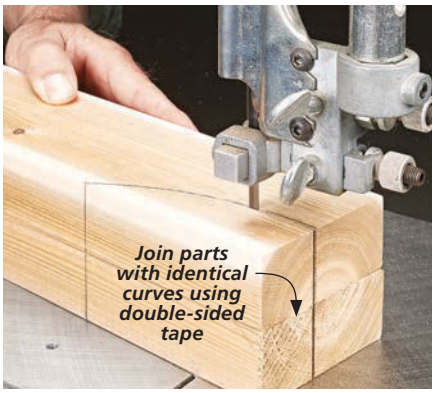

[2] Stack Them Up

One area of woodworking that's difficult to duplicate is freehand curved cuts at the band saw. But if you have parts that require identical curves or tapers, such as table legs, there's a simple way to speed up the process and enhance accuracy. Just join a couple of them with double-sided tape and cut them both at once (lower left photo). You can even leave them together while smoothing them out with a sander.

[3] Set Stop Blocks

When it comes to quick consistency for a variety of operations, a stop block will

▲ By assembling frames before profiling the edges, you can avoid alignment issues later.

be your best friend. You can use a stop block to produce parts of identical length by clamping it to an auxiliary miter fence on the table saw, for example. And for making holes at identical locations on the drill press, it's also the way to go (lower right photo, previous page). I'll also use stop blocks on my miter saw fence, at the router table for stopped cuts, and in many other instances.

[4] Save Your Settings

Tenons (along with mortises) are the cornerstone of good joinery. So I tend to cut them a lot. And with most projects with tenons, you'll find that the dimensions are pretty consistent from one tenon to the next, with cuts of similar lengths or depths.

To take advantage of this, I'll make as many tenon cheeks or shoulders as I can at one blade setting before moving on. For example, I'll cut all the ⅜" cheeks before the ¼" shoulder cuts (photos above). Not only is this faster, but it improves accuracy by not changing a blade setting that's difficult to reset later on.

[5] Simple Centering

Another operation that can be difficult at times is cutting a centered groove. Though it sounds simple in theory, you can spend an awful lot of time adjusting the fence and making test cuts to get a groove perfectly centered.

A better approach is to cut the groove in two passes as shown in the photos below. To accomplish this, set the blade slightly off-center, and cut the groove in two passes by flipping the board end for end between passes. You can also adjust the rip fence slightly to easily change the size of the groove.

[6] Pair Up Profile Cuts

Profiles like roundovers, chamfers, and coves are a great way to dress up your projects, as well as soften the edges. But if you've ever tried to line up workpieces that already have the profile cut on them, you know how difficult it can be. That's why another time-saving trick I like to use is to save my router profile work until after the workpieces have been joined together. If I plan to rout a ¼" roundover on the parts of a frame, I'll assemble the frame first before routing the profile around the perimeter (photo above). The work goes faster, and the profile is guaranteed to align.

[7] Sand Smarter

The same common-sense approaches can be used when completing project assemblies. For example, the inside faces of cabinets can be tough to sand once the cabinet is assembled. So I'll lay my parts on the benchtop and sand the inside faces before assembly, taking care not to over-sand the joinery. For the outside of the case, though, I'll save the sanding for after assembly to achieve the smoothest results possible (photos below). W

▼ Sand the hard-to-reach inside faces before assembly, and the outside faces afterward.

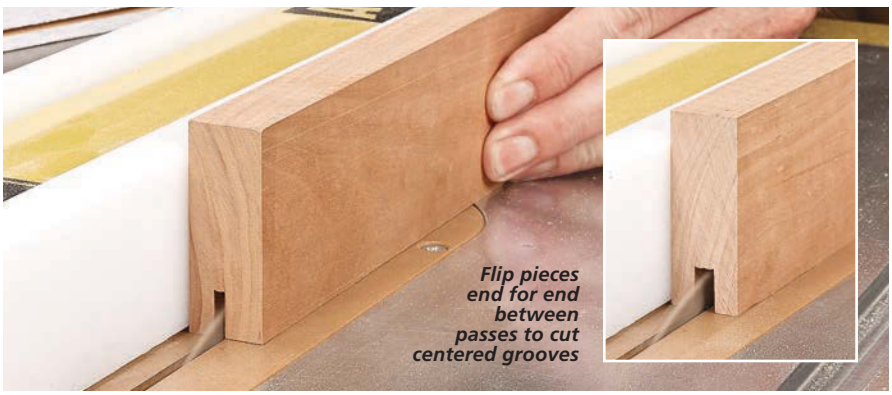

essential upgrades

Table Saw Sleds

A critical part of every project is making clean, square crosscuts. This leads to snug-fitting joinery and a better-looking project. So it comes as no surprise that most woodworkers rely on their table saws to tackle this task.

A well-tuned saw with a sharp blade is a good starting point. But adding a crosscut sled can further simplify the process and aid in giving you predictable, high-quality cuts. While you may think of a sled as only helpful for cutting panels, there are some good reasons for using one for nearly any size workpiece.

The main benefit of using a sled is that the workpiece rests on the surface of the sled instead of sliding across the saw table. This means the piece won't shift or catch during a cut, so your odds of getting a cleaner cut increase. Also, the base of the sled and the fence provide zero-clearance support to the bottom face and back edge of the workpiece, reducing the possibility of tearout.

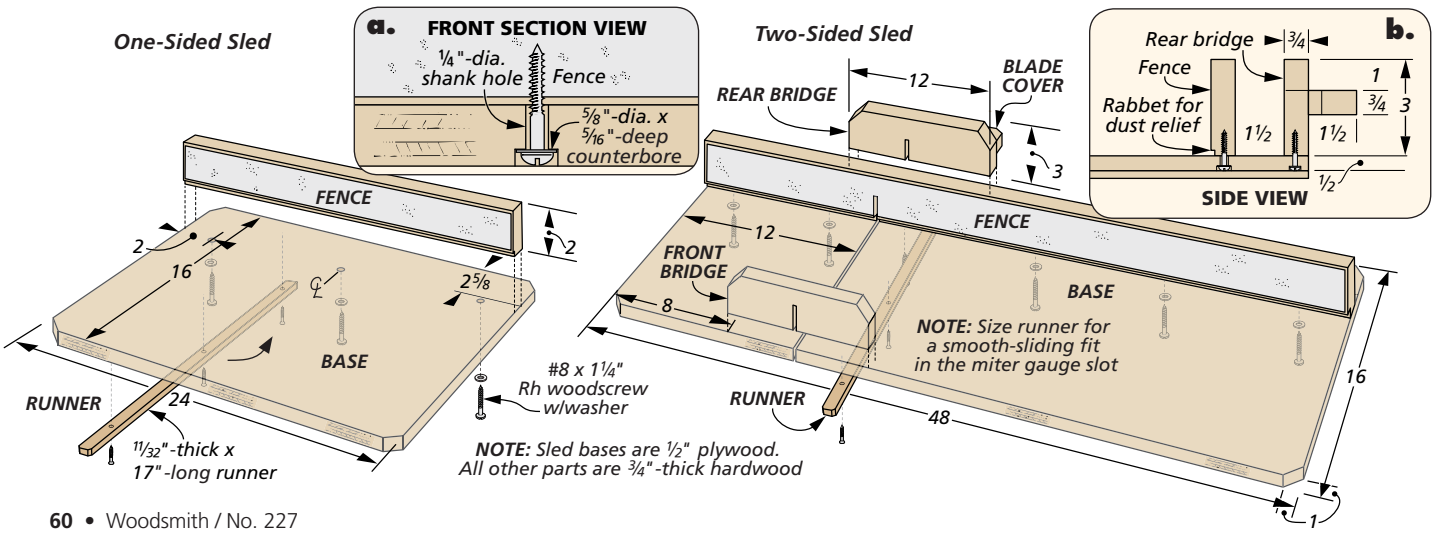

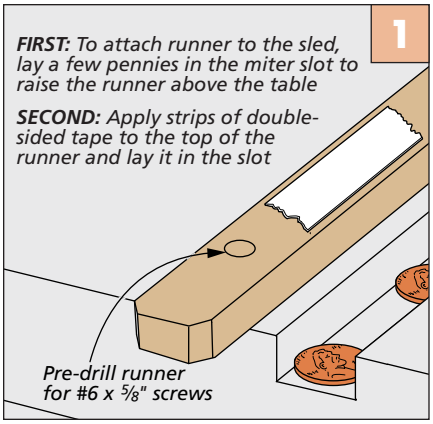

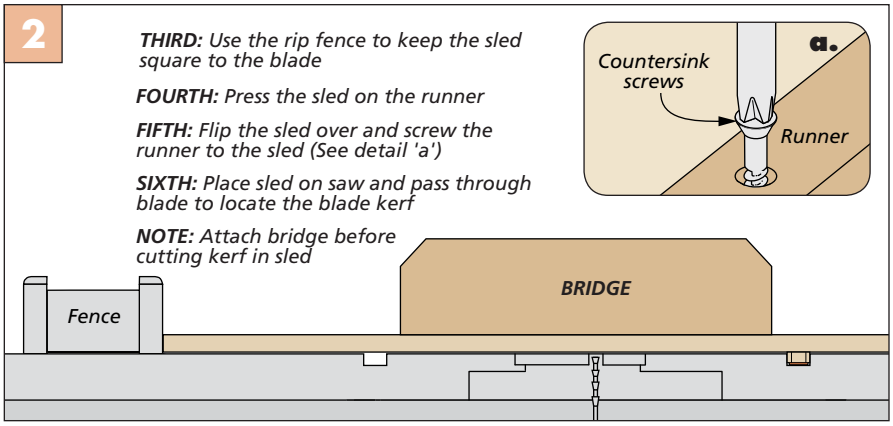

Clearly, a sled makes a lot of sense. But what kind of sled should you build? I'd like to share two designs that meet most of my project-building needs, as shown in the drawings on the previous page. Think of these sleds as "everyday sleds" designed for general crosscutting duties when building any project.

ONE-SIDED SLED. The first sled shown in the main photo on the previous page is made to work from one side of the saw blade. It's like an extended miter gauge with a base. What's nice about this sled is that it doesn't weigh much. This means I'm more likely to actually use it. The sled works great for accurately cutting parts that are 24" or shorter. The base will fully support panels up to 12" wide.

TWO-SIDED SLED. The other sled design is larger, which allows for cutting longer workpieces, as shown in the photo below. The space between the front bridge and the fence allows you to crosscut 12"-wide panels, much like the one-sided sled. But the base of this sled straddles the blade. Extending the base to the opposite side of the blade supports the waste piece as it's cut away. The result is it can't fall and possibly cause a split or kick back at you.

The two parts of the base are held together with hardwood bridges. The rear bridge piece incorporates a safety feature — a blade cover. This hardwood strip acts as a barrier to keep your thumbs out of the path of the blade as you complete a cut, as shown in the inset photo below. I made the fence out of a separate piece of hardwood from the bridge so that it's easy to fine-tune its position for a square cut.

SLED DETAILS. Both of the sleds are made from ½" Baltic birch plywood and ¾"-thick hardwood. The runners are made from hardwood and sized for a smooth-sliding fit in the miter track.

I only used one runner in the two-sided sled. Using two runners can be problematic. Unless they're perfectly parallel, the sled will bind in use.

You'll notice that the sleds operate from the left side of the table saw (as you face it). You could also set up the sled to work from the right side. But if the table saw is positioned with the right side against a wall, the wall limits the length of a workpiece that can be cut. With the sled on the left, the size of the workpiece isn't as restricted.

The fence on each sled has a small dust relief rabbet cut on the lower edge (detail 'b' on the previous page). And I added a strip of adhesive-backed sandpaper (180-grit) to the fence to prevent a workpiece creeping during a cut.

SETTING UP. A sled doesn't do you any good if you can't make square cuts. So accurate setup is an important element of building each sled. The drawings above show how I attach the runner so that it's parallel with the base.

After attaching the runner, I raise the saw blade and make a cut to establish the edge of the base. With this edge (or kerf) as a reference, use a square to attach the fence with screws set in oversized, counterbored holes in the base, as shown in detail 'a' on the previous page. Now take some time to make some test cuts and check the angle with a square. The oversize screw holes allow you to dial in the fence position for perfect cuts.

▲ A two-sided sled supports long boards and panels for making accurate cuts. The sled is guided by a single hardwood runner. On the back of the rear bridge, a blade cover provides a physical barrier to keep your hands clear of the blade (inset photo).

A hardwood stop block and a clamp are all you need to cut multiple parts to the same length. A lip on the top edge keeps the stop block square to the sled's base.

This swing stop slides in a T-track mounted to the fence (refer to sources on page 67). A cursor in the stop lets you dial in the setting using a tape measure attached to the track.

SLED UPGRADES

A basic crosscut sled makes getting precise, square cuts a sure thing. However, you can get even more out of the sled with a few accessories.

SIMPLE STOP BLOCK. The upper left photo shows a basic hardwood stop block that I routinely use. But this block has a few tricks up its sleeve. The lower corners of the block are chamfered. This creates a relief space for dust so it can't build up between the workpiece and the stop and spoil the accuracy of the cut.

Less noticeable is a wide, shallow rabbet on the back. The lip formed by the rabbet registers the block on the top edge of the fence. It functions to keep the stop block square to the base.

A clamp-on block has a couple drawbacks. First, you need to get out a tape measure every time you set it up. And with the block clamped in place, you can't make other cuts without removing it.

TRACK & STOP. The answer to these drawbacks is to turn to a commercial T-track system. One of my favorites is shown in the upper right photo. A track is mounted to the top of the fence. It's designed to accept an adhesive-backed tape measure and a swing stop. You can flip the stop out of the way to make other cuts without losing your setting.

MAINTAINING A SLED. Over time, blade deflection and vibration may lead to the base of the sled getting a little chewed up to the point that it doesn't provide the same level of support and backup that it used to. But don't worry, you can quickly and easily refresh the sled and get tearout-free cuts without having to make a new one. The box below has all the details for each sled design.

A nice crosscut sled provides a higher level of accuracy and safety. More than that, it allows you to focus on the finer points of building projects and increasing your enjoyment of the process. That's a win-win in my book. W

Quick Fix: ZERO-CLEARANCE TUNE-UP

With a single-sided sled, the solution is to smooth the edge and glue on a narrow strip of hardwood. After sanding the hardwood flush with the surface, make a cut, and the sled will work just like new.

Bring a two-sided sled back into shape by cutting a piece of 1/8" or 3/16" hardboard to fit between the front bridge and the fence. Secure it with a few strips of double-sided tape.

Special-Purpose Sleds: DADO & MITER SLEDS

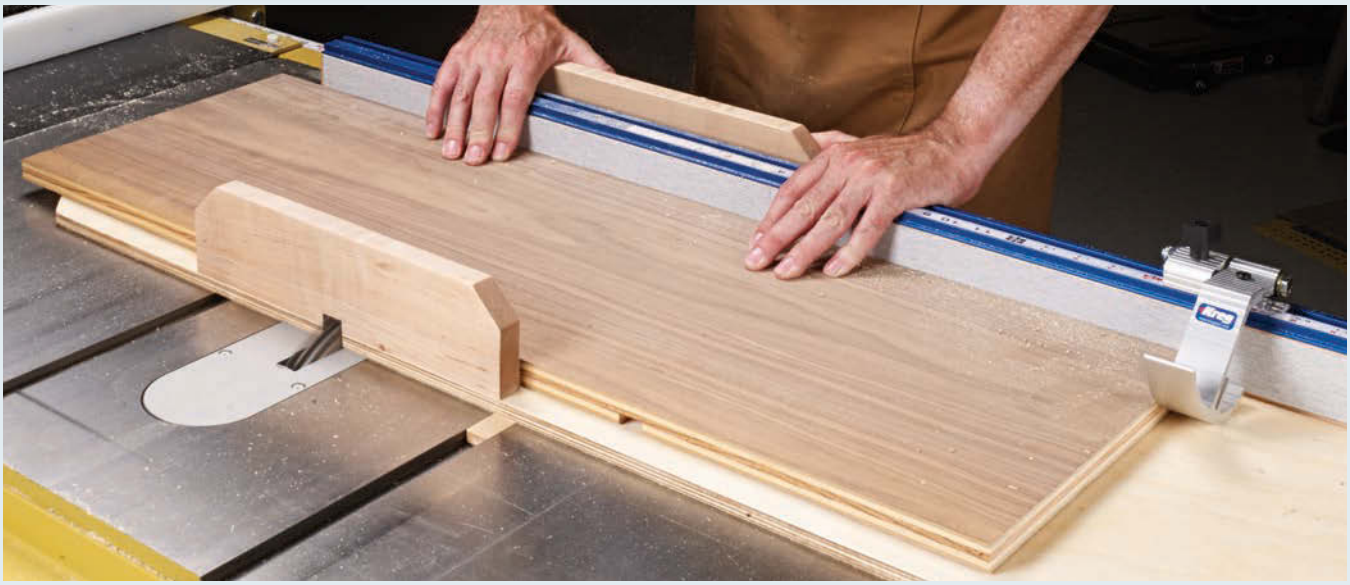

After working with a crosscut sled for a while, I started thinking of other table saw tasks that could be improved with a sled to guide the workpiece. The two ideas shown here are based on relatively common tasks. The idea behind each one is to simplify the setup.

DADO SLED

A lot of my projects are made from plywood pieces joined with dadoes. Long, narrow panels can be a challenge to guide when using either the miter gauge or the rip fence. To improve workpiece control, I made a version of the two-sided sled and dedicated it for use with a ¾" dado blade. Of course, you can use the sled with other dado width setups, but you won't have complete support right around the blade unless you add an auxiliary, hardboard base, as shown in the box on the previous page.

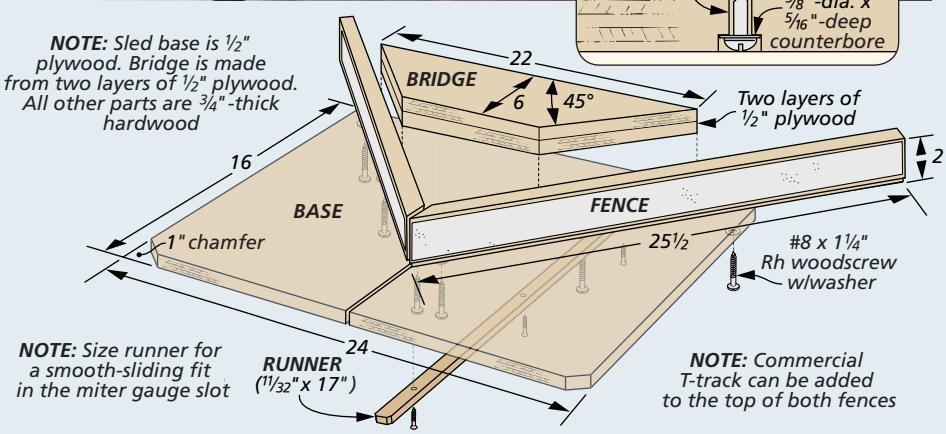

MITER SLED

Cutting miters for a frame or to wrap molding around a project are a couple of other tasks where a sled can come in handy. Instead of resetting the miter gauge each time you need to make a cut, the sled you see here is automatically set for perfect 45° cuts.

While the look of this sled seems unique, it shares some of the same components as the one-sided sled shown on page 60. The base is the same size. The difference is that I positioned the runner to center the sled on the blade.

The miter sled incorporates two fences (with T-track) mounted at 45° to the blade kerf for left and right hand miter cuts. To hold the sled together and act as a blade cover, I made a trapezoid-shaped bridge from two layers of plywood. It's glued along the back edge of the sled. A small gap (¼") between the plate and fences allows you to fine-tune the fence positions to dial in a perfect miter.

tips from our shop

Shop Notes

Router Plate Installation

One of the challenges of making a router table (like the one on page 30) is cutting an opening in the top for the insert plate. To meet the challenge, I employ an approach that uses the plate as a template for locating a set of strips. These strips guide a hole saw and a pattern bit to form the opening. Most pattern bits will require 1"-thick strips. So I made strips from ¾" plywood with a layer of ¼" hardboard glued on the top. Cut the strips a few inches longer than the length and width of the plate.

LOCATE GUIDE STRIPS. Position one of the guide strips so it's parallel with one edge of where you'd like the plate located. Double-sided tape holds the strip in place. After setting the plate along this strip, you can "wrap" the plate with the remaining guide strips, as in Figure 1.

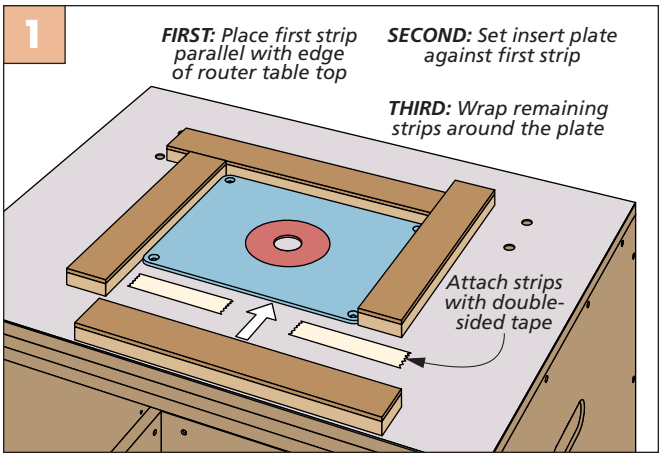

DRILL STARTER HOLES. To provide a starting point for the router bit and to form the corners of the opening, drill a hole in each corner that matches the radius of your router plate's corners, as in Figure 2. I used a hole saw. Wrap the body with masking tape to compensate for the set of the teeth, as you can see in Figure 2a. Once the teeth cut through the laminate, you can remove the tape (so it doesn't get gummed up in the hole) and complete the hole, as in Figure 2b.

CREATE THE LIP. The next step is to use a router and a ½" pattern bit to create a lip for the insert plate to rest on. To determine the cutting depth of the bit, set the plate on a guide strip, place the router on the plate, and lower the bit until it barely touches the table top, as shown in Figure 3a. Now, set the router plate aside and rout a channel all around the inside of the template (Figure 3b). In order to maintain the radius in the corners, rout only to the edge of each starter hole.

REMOVE THE WASTE. Cut away waste in the middle with a jig saw, following the inner edge of the groove (photo above). Then use a sanding block to smooth the cut edge. With the opening complete, all that's left to do is mount the router to the insert plate and install it in your new router table top.

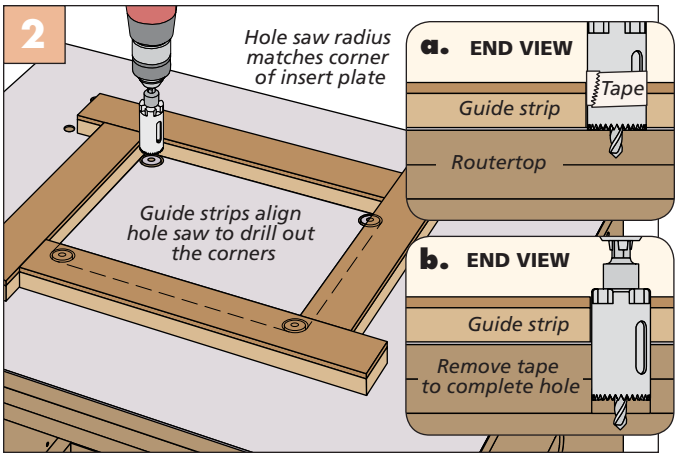

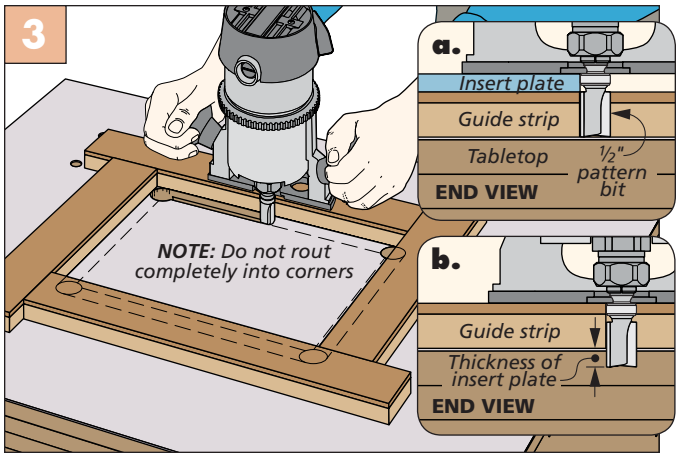

Making a Handhold

To create smooth, consistent handholds for the workshop carts (page 24), I used a template. The template is used for laying out and shaping each handhold.

TEMPLATE. I started by making the template out of ¼" hardboard, as you can see in the drawing at right. You could also use plywood. Just make sure the template is at least ¼" thick to provide an adequate surface for the bearing on the pattern bit you'll use later. Take care to make the edges of the opening smooth.

TRACE & DRILL. Put the template to work by positioning it on the workpiece and tracing the handholds. I drilled out the ends of each handhold as indicated in Figure 1 below.

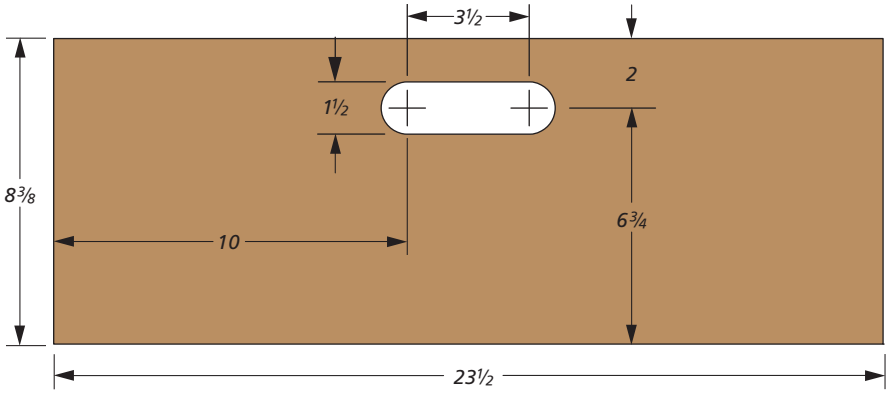

REMOVE THE WASTE. The end holes provide clearance to start a jig saw to remove the inside waste (Figure 2). Take care to keep the blade just inside the layout lines, as in Figure 2a.

FLUSH TRIM. For the final step, attach the template to the workpiece with double-sided tape. Then use a hand-held router and a pattern bit to trim the handhold to shape, as you can see in Figure 3.

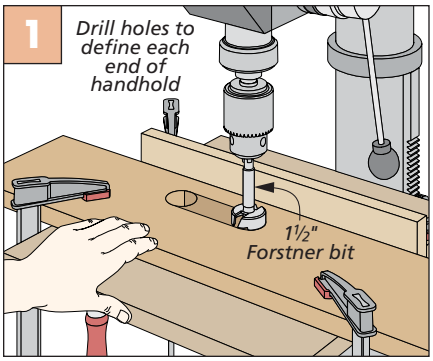

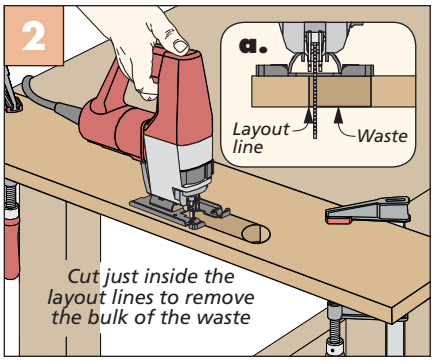

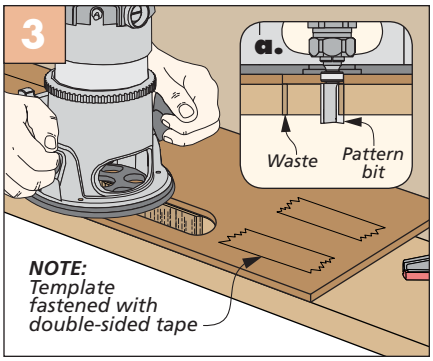

Table Saw Box Joint Jig

To cut the box joints on the craft center trays and handle (page 34), I used a table saw and the jig shown at right. The crucial components you need to cut box joints are a tall front fence and a hardwood key. But I added a couple other parts to make the cutting process go more smoothly. The hardboard base lets the workpiece slide without catching on the saw's throat insert. And the back fence allows minor adjustments in case your box joints are too loose or too tight.

BUILDING THE JIG. Making your own box joint jig is fairly straightforward using the drawings shown at right. The main considerations are to cut a notch in the front fence and glue in the key before adding the hardboard base and back fence. Then, positioning the key in relation to the blade is critically important for cutting accurate box joints, as shown in detail 'a.' Oversized holes in the back fence allow you to tweak the settings.

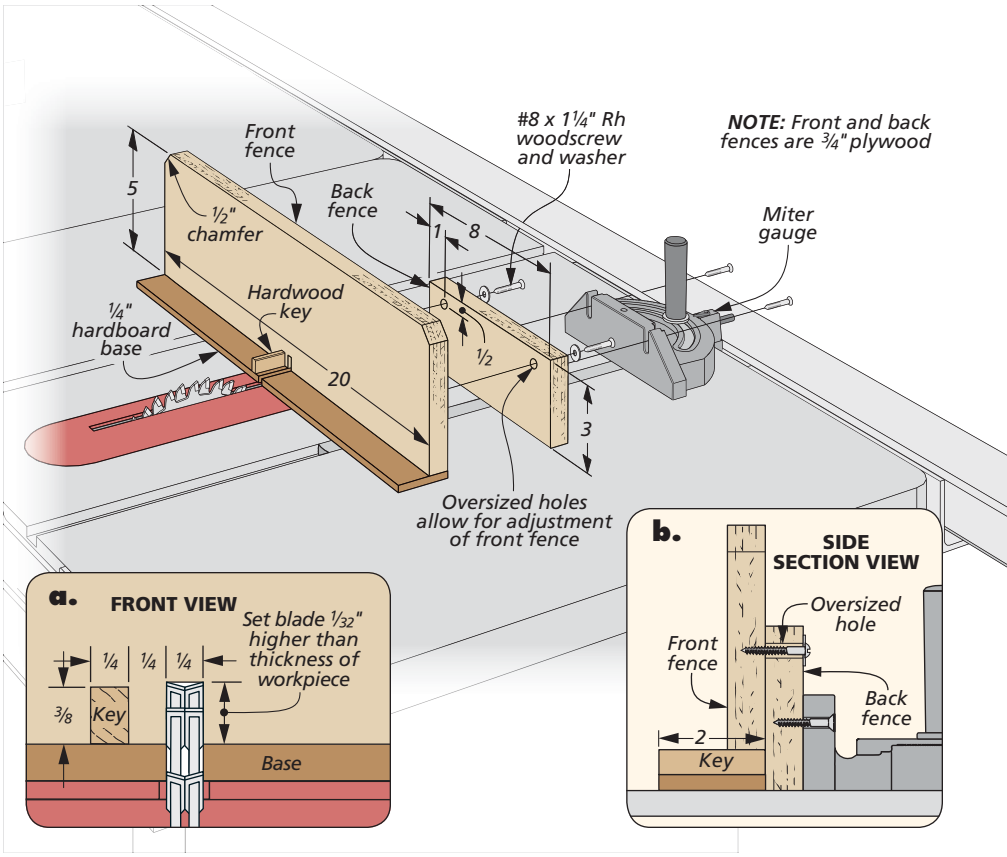

Curved Tongue

The calendar on page 22 has a curved cap piece that's mounted to the back. To attach this cap, I used tongue and groove joinery. The groove is in the cap, while the tongue is on the top of the back. And that tongue is what we're focused on making here.

In order to establish a clean line between the back and the cap, I cut the tongue so it was flush with the front of the back. Before forming the tongue, I laid out the arc with a trammel (Figure 1). This arc represents the edge of the tongue. After I cut the arc at the band saw (Figure 2), I sanded it smooth.

ROUT THE GROOVE. To create the tongue, I moved to the router table and used a 3/8" rabbeting bit to follow the contour of the arc (Figure 3). To ensure a good fit, I carefully crept up on the final tongue thickness (Figure 3a).

CLEAN UP. Since the joint is a cross-grain assembly, it's a good idea to build in some room for wood movement. So I trimmed the tenon back from the ends. Doing this, along with cutting a slightly longer groove in the cap, provides for plenty of room. A small back saw, as shown in Figure 4, works best. To finish up, pare away the excess tongue material with a chisel (Figure 4b).

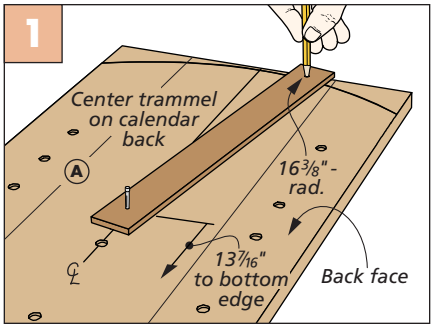

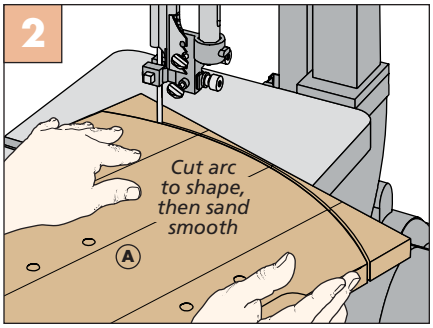

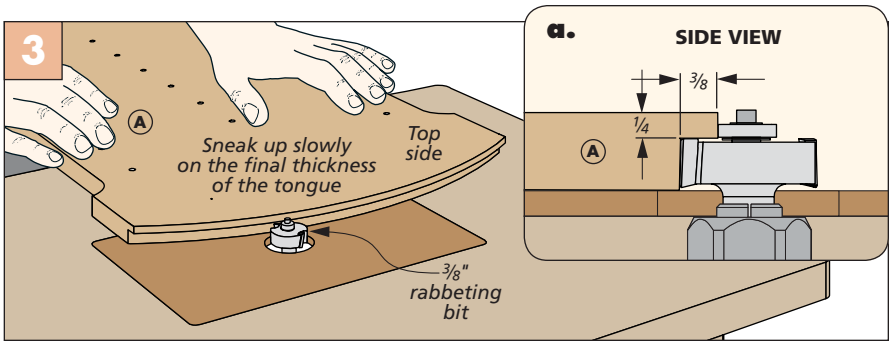

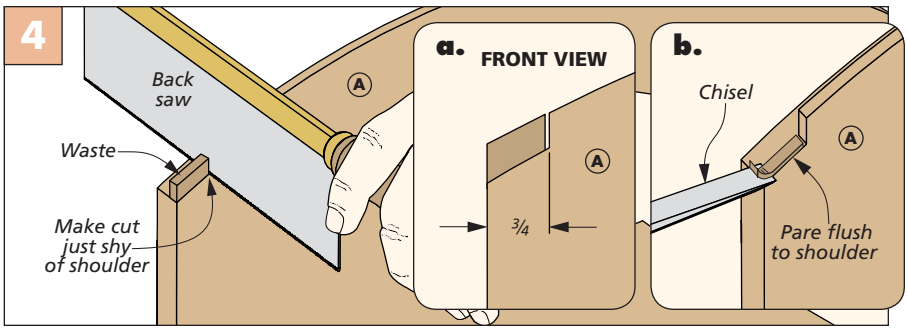

Tile Guides

The tile guides mentioned on page 22 in the wall calendar article are simple enough in design, but they're a bit small to machine safely. To protect my fingers, I started with an extra-wide poplar blank, as shown at right.

ROUTER FIRST. The rabbet width and depth are the same on both guides, and the cut is best tackled at the router table (Figure 1). For the field guides, you'll rout the same size rabbet on both sides (Figure 1a). For the top and bottom guides, rout the rabbet on one edge only (Figure 1b). Even though the blank is oversize, it's best to use a push block.

TABLE SAW. Now cut the guides free from the blank at the table saw, as shown in Figure 2. Then joint the edges of the blank square and repeat the process until you have as many guides as needed for the calendar. W

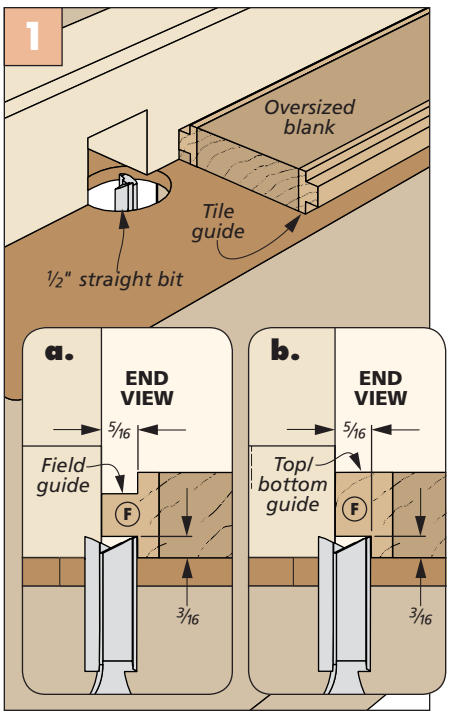

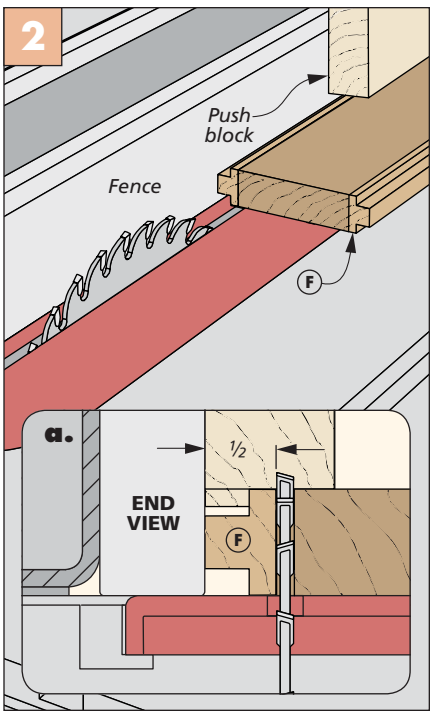

hardware & supplies
Sources

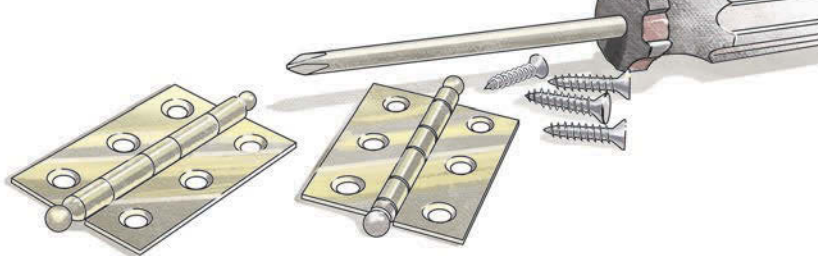

Most of the materials and supplies you'll need to build the projects are available at hardware stores or home centers. For specific products or hard-to-find items, take a look at the sources listed here. You'll find each part number listed by the company name. See the right margin for contact information.

ANGLE GAUGES *(p.10)*

- **Lee Valley**
  Bevel Setter 05N66.01
- **Rockler**
  Digital Sliding Bevel 47091
- **Home Depot**
  General Protractor . . 100349259
- **Woodcraft**
  Starrett Protractor 06R16
  Wixey Angle Gauge 159488

POWERLIFT PRO *(p.14)*

- **MLCS**
  PowerLift Pro 9590
  Android Tablet 9591
  Locking Insert Ring Kit . . . 9566
  3½" Reducer Sleeve 9568
  3¼" Reducer Sleeve 9569
  3¼-hp Router Motor 9564

WALL CALENDAR *(p.20)*

- **Istencils**
  Number Stencils . . . . . AL-NGB
  Letter Stencils . . . . . AL-UGB

The paint for the poplar parts of the calendar is from *Benjamin Moore*, "Waters Edge" (#1635) and "Van Deusen Blue" (#HC-156). Both of these are Aura Matte finishes. The stencil paint is from *Dick Blick*, Chroma Acrylic Mural Paint in "Blacktop Black."

ONE-WALL WORKSHOP *(p.24)*

- **Lee Valley**
  26" Drawer Slides 02K30.26
  20" Drawer Slides 02K30.20
  3" Casters 00K21.31
- **Kreg Tool**
  Insert Plate PRS3036
- **Woodcraft**
  Dust Port 147788
- **MLCS**
  Power Swtich 1727

The carts were painted with *Benjamin Moore's* "Rendezvous Bay" (eggshell). The tools sliders, and the tops of the assembly cart, and flip-top cart are finished with two coats of spray lacquer (satin). The plastic laminate for the router table is "Sandcastle" from *Nevamar*.

CRAFT CENTER *(p.34)*

- **McMaster-Carr**
  Binding Posts 93813A336
- **Lee Valley**
  20mm Cont. Hinges . . .00D52.20
  Ball Chain Sets 00G48.01

The sewing box was stained with a mixture of three parts *Zar* cherry stain and one part *Wood Kote* Jel'd stain (cherry). Then it was sprayed with two coats of lacquer.

DOMED-TOP TRUNK *(p.42)*

- **Kennedy Hardware**
  Trunk Lock TKL-3AB
  Trunk Handles TKH-93
  Trunk Handle Loops . TKH-72AB
  Trunk Drawbolts . . . TKD-33AB
  Lrg. Trunk Corners . . TKC-37AB
  Trunk Knees TKC-26AB
  Trunk Hinges TKH-63
  ¾" Steel Trunk Tacks . . . TKT-9S
- **Rockler**
  Bronze Lid Stay (LH) 32128

The trunk was stained with one coat of *Varathane Premium Wood Stain* in "Gunstock," followed by a light coat of lacquer to lock in the stain. After the lacquer dried, I applied one coat of *General Finishes Glaze* in "Van Dyke Brown." The trunk was then sprayed with a couple of coats of flat lacquer.

To get the trunk hinges and steel trunk tacks to match the antique-brass look of the other hardware pieces, I soaked them in a brass aging solution.

PERSONALIZING WORK *(p.56)*

- **Rockler**
  Electric Iron 48893
  Torch-Heated Iron 48719
  Electric Iron Head 44660
- **Highland Woodworking**
  Letter Stamp 168083
  Signature Medallions . . . . varies
- **Woodcraft**
  Name Plates . . . . . .varies

TABLE SAW SLEDS *(p.60)*

- **Kreg Tool**
  24" Top Trak KMS7712
  48" Top Trak KMS7714
  L-R Tape KMS7724
  R-L Tape KMS7723
  Swing Stop KMS7801

THE FUTURE OF WOODWORKING IS HERE!

Woodsmith VIDEO EDITION

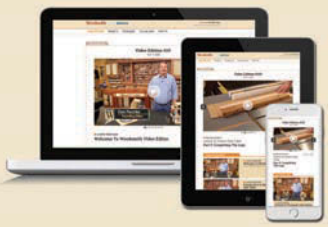

- Be a Founding Member and get access to new videos every week — 125+ videos per year!
- 26 Weekly Video Editions — includes Heirloom Projects, Shop Projects, Step-by-Step Techniques, and Shop Tips!
- Plus, 26 Weekly Talking Shops — features in-depth Talking Shop videos, plus bonus Shop Tips.

WoodsmithVideoEdition.com

MAIL ORDER SOURCES

Project supplies may be ordered from the following companies:

Benjamin Moore
benjaminmoore.com

Dick Blick
800-828-4548
dickblick.com

General Finishes
800-783-6050
generalfinishes.com

Highland Woodworking
800-241-6748
highlandwoodworking.com

Home Depot
800-466-3337
homedepot.com

Istencils
877-863-5227
istencils.com

Kennedy Hardware
800-621-1245
kennedyhardware.com

Kreg Tool
800-447-8638
kregtool.com

Lee Valley
800-871-8158
leevalley.com

McMaster-Carr
630-833-0300
mcmaster.com

MLCS
800-533-9298
mlcswoodworking.com

Nevamar
877-726-6526
nevamar.com

Rockler
800-279-4441
rockler.com

Woodcraft
800-225-1153
woodcraft.com

Wood Kote
800-943-7666
woodkote.com

Zar
zar.com

looking inside
Final Details

▲ *One-Wall Workshop.* As a follow-up to the workshop featured in our last issue, here are three useful additions — an assembly cart, a router table, and a flip-top tool stand. Each one tucks neatly out of the way when not in use. You'll find plans starting on page 24.

▲ *Perpetual Wall Calendar.* By simply rearranging the individual tiles, you can use this stylish calendar month after month and year after year. Not bad for a weekend project. To learn how it's made, turn to page 20.

▲ *Craft Box.* The cantilevered compartments of this box provide space for a variety of craft supplies. And a sturdy handle allows you to carry it anywhere. Complete plans start on page 34.

◄ *Steamer Trunk.* The domed lid and brass hardware may be the focal points of this classic trunk. But inside, you'll find a sliding till and plenty of storage. Step-by-step instructions begin on page 42.